TRANSONIC WIND TUNNEL
STATUS REPORT
31 MARCH 1999

16 inch SSV

The O-ring length for the sleeve on the SSV is very critical. Too short and the O-rings do not seal good. Too long and it is difficult to install them in the grooves and get the sleeve into the outer cylinder of the SSV. The O-rings may shear off or the sleeve may be so tight it won't move. After a couple of years of experience it has be found that O-rings of N70 material and 0.210" diameter should be 46 inches long. Material from different batches may require slightly different lengths as the diameter will vary slightly and the stiffness of the material may vary as well.

No more than 14 ports on the SSV should be open at any one time. With 14 or few ports open the chock point of the main tunnel flow is in the SSV. What ever happens upstream does not change that. With 15 or more ports open the chock point moves forward into the tunnel towards the test section. Controlling the Mach number becomes difficult if not impossible.

13 Port Rake Leaks

The 13 port rake is installed with plastic tubing inside the tunnel with clamps on hose barbs using safety wire and out side the tunnel using tube fittings. The internal portion is normally left as a unit. The outside plumbing must be removed in order to remove the rake. These fittings are a potential source of leaks. Slight leaks in these fittings can cause the pressure traces not to level out to their true level during the run time. The pressure will continue to drop and the information obtained from them severely limited or non existent. Check the first run after installation for good data. If the pressure levels do not stabilize check the fittings. They should not rotate on the tube.

5 hole conical probe

The 5 hole probe has provide acceptable results but a very extensive calibration should be done if much work is to be done using it. The probe has some asymmetries about it. A new commercially manufactured probe may be better in that it may be more symmetric.

Fill valve control

The main fill control valve is pneumatic operated. Near this valve behind the control valve is a regulator for reducing the 175 psi air to about 22 psi and an isolation valve. Currently the regulator must be taken apart and the seat placed correctly and then reassembled every time the control air (175 psi is started). The regulator should be replaced and a filter installed in this line upstream.

Solenoid valve SSV close problem

The close solenoid on the 16 inch SSV does not close when necessary to close the SSV. The valve leaks sever enough to prevent SSV closure. Currently the vent port is connected to the valve above the sphere hatch. This valve must be closed in order to close the SSV and must be opened before the SSV will open.

FFV problem & status

The Flex Flow Valve (FFV) is currently not used. A solid plate is installed downstream to block the flow. The available test window is shortened without the FFV but the tunnel still operates well. This plate was installed during 1990 ??? Correcting the FFV problems is probably a highly involved job of trouble shooting.

Control System

The control system is fairly reliable although regular misfires do occur. Experience helps reduce the number of misfire runs. The system should be run through the fire sequence a few times before firing the tunnel.

A better system would be to have 3 or 4 timer circuits provide the timing using discrete resistor for some variation in timing. Use past tunnel runs to nail down nominal values and provide a small variation. The timer circuits would themselves control transistor which intern would control thyristor, which would control the power to the solenoids.

Proper design would eliminate several small timing variations.

Diaphragm cutter pneumatic cylinder loose tie rods

This is a problem which has occurred twice and is difficult to find. The data appears as if the diaphragm cutter fired late. Try to increase pneumatic pressure may help for a short time but it is not the answer. The effect on the data is erratic and inconsistent. After a few runs of inconsistent diaphragm cutter operation it might be wise to check the pneumatic cylinder that fires the diaphragm cutter and ensure that the tie rods are tight, the hose connection is tight, and the hose is in good shape.

Auxiliary flow pipe assembly warning

The boundary layer bleed off pipe from the diaphragm to the flex flow valve and ball valve must be assembled in a specific order to ensure there is now leakage. Any leakage will affect the Mach number control and the stability of the Mach number during the run period. The flex flow valve must first be attached to the pipe and securely tightened. The flange joint just outside the sphere near the ball valve must then be tightened securely. The joint downstream of the FFV can then be tightened up. A come-a-long may need to be used to pull the pipe downstream of the FFV back an inch or two to provide some working room for making up the first two flange joints. The come-a-long is attached to a post at the corner of the supersonic tunnel silencer.

Test section Mach distribution deficit

The test section Mach number distribution has a slight dip in it at the location where the four upstream boundary layer bleed hoses attach. This could probably be eliminated by the addition of some hardware to disperse the suction over a longer length of the test section.

TRANSONIC

OPERATOR'S

MANUAL

31 MARCH 1999

(Figures refer to those in the 31 August 1994 Manual update as that version was the starting point. That version was changed very little, just new information added and reorganized.)

TABLE OF CONTENTS

1.0 TUNNEL DESCRIPTION

The UTA High Reynolds Number Transonic Wind Tunnel (Pilot HIRT) located in the UTA Aerodynamic Research Center, is a Ludweig tube wind tunnel designed to provide high Reynolds number transonic flow. A discussion of the principles of the operation of this type of wind tunnel will be presented in Section 2.0. Detailed Descriptions of the Pilot HIRT hardware are presented in this section. A schematic drawing of the pilot tunnel is given in Figure 1. This facility is a one-thirteenth scale model of a high Reynolds number transonic tunnel which was proposed for construction at Arnold Engineering Development Center (AEDC).

1.1 CHARGE TUBE

The Ludweig tube storage system (charge tube) is 13.94 inches in diameter and 111 feet in length. It can be charged to a pressure of 770 psia (hydrostatically tested to 1150 psig) This will produce a maximum stagnation pressure of about 500 psia. At the downstream end is a transition section 18.5 inches in length which channels the flow from the circular charge tube to the rectangular test section. The contraction ratio (area ratio) of the nozzle is 2.27, and the contours are designed to provide a smooth acceleration of the flow.

1.2 TEST SECTION AND PLENUM CAVITY

The test section, illustrated in Figure 3, has a rectangular cross-section 7.34 by 9.15 inches. The porous walls consist of two stacked plates with 60 degree inclined holes having a tapered porosity pattern in the upstream one third of the test section length. The combined plate thickness is 0.141 inches and the holes in the walls are 0.120 inches apart on centers in both directions in the uniform porosity region. The porosity can be varied manually on each wall in the range from 3.5 to 10 percent by moving one plate relative to the other.

The test section is surrounded by a plenum cavity which has a volume approximately 1.75 times that of the test section (neglecting the volume of the wall support structure). The wall support structure extends through this cavity to the outer shell, but it is designed so as to provide essentially no restriction to flow within the cavity.

1.3 EJECTOR FLAPS

The ejector flaps at the downstream end of the test section, shown in Figure 5, are 3.0 inches long and can be opened to provide a maximum gap height of 0.9 inches. The gap can be adjusted anywhere in this range with the flaps locked into position prior to a run. A provision is also included in the design of the flap actuating mechanism to make a step change during a run from an initial setting to another opening.

The ejector flap opening height is determined by the flow Mach number desired. Flap openings of less than 0.3 in. are used to provide Mach numbers in the range of 0.65 _ 0.95; openings in excess of 0.3 may be used for the higher Mach numbers. The exact Mach number is determined by the interaction of the ball valve opening and the flap opening height.

1.4 MODEL SUPPORT SECTION AND DIFFUSER

Downstream of the ejector flaps is the diffuser assembly (see Figure 2). The first section contains another transition region from the rectangular test section to a circular diffuser section. Downstream of the transition is a conical diffuser with a 3 degree wall angle and an exit diameter of 16 inches. A sector model support is mounted in the upstream end of the transition section. Four instrumentation access ports are located downstream of the sector which are used to bring instrumentation leads and/or pressure tubing out of the tunnel.

1.5 PLENUM EXHAUST SYSTEM

Flow in the plenum cavity may be exhausted to the atmosphere through the system shown in Figure 7. Ten 2-inch I.D. flexible hoses are attached around the downstream end of the plenum shell and run to a common manifold. Downstream of the manifold is a diaphragm holder, consisting of two plates, which sandwich a mylar diaphragm, and is held in place by a Grayloc clamp. The diaphragm is ruptured at the desired time by means of an pneumatically actuated arrowhead cutter. Downstream of the diaphragm assembly the air passes through a 6-inch variable orifice ball valve. The ball valve is set prior to a run according to the desired Mach number. The Flex Flow Valve is no longer used and is in the closed position. For more information on the Flex Flow Valve, see the original documentation from AEDC.

1.6 STARTING DEVICE

The current starting device is a 12 inch diameter Sliding Sleeve Valve (SSV). This opens and closes by a system of pneumatic actuators. The SSV is closed to pressurize the tunnel. The Sleeve has 24 rectangular ports 2.5 by 2.75 inches each. Current operational parameters dictate that the SSV should be actuated approximately 46 ms before the plenum cutter is actuated. If the SSV has a consistent opening speed, the expansion wave from the SSV and the one from the plenum diaphragm will reach the test section at approximately the same time. The current problems with this system involve the O-rings and consistent opening times.

As an alternative, a diaphragm (approximately 2 msec opening time) could be used as the main starting device. For this mode of operation the 16_in valve is set in place and an additional mylar diaphragm is clamped between the diffuser and the valve. A cruciform with a pneumatic cylinder operated cutter is mounted inside the valve inlet approximately 2 inches downstream of the diaphragm to initiate diaphragm rupture. The valve sleeve is kept in the open position. Figure 10 is a view of interior of the 16 in. valve with cruciform installed. The drawback to this idea is the tear down of the tunnel after each run regardless. For more information on the 16 inch valve as well as the diaphragm start system see original AEDC manual.

1.7 EXHAUST SPHERE

All of the main tunnel flow, as well as that from the plenum exhaust system empty into a large exhaust sphere. From there it is carried out of the building through a four foot diameter duct into a 20 foot tall silencer system.

1.8 TOTAL AND STATIC PRESSURE PROBES

One static and two total pressure probes are located in front of the nozzle section. Two total pressure probes are used to help account for any irregularities that might exist in the flow. These pressures are mechanically averaged by joining the tubing together before splitting to two separate transducers. One transducer serves as the total pressure reading during the actual run. The other transducer (connected to a DVM) serves as the indicator for charge tube pressure as well as the main transducer against which all other transducers are calibrated during charging of the tunnel.

1.9 PLENUM CHAMBER STATIC PRESSURE PROBES

The test section free stream static pressure cannot be determined because the bleed air to the plenum chamber would cause any measurement to include part of the dynamic pressure. Instead the plenum chamber static pressure is determined by means of four equally spaced static pressure probes. The probes are mechanically averaged by joining to a single pressure tubing which is fed to the outside by means of an instrumentation access port. The four static pressure probes are used to account for any non-uniformity that might exist in the plenum chamber flow, and to cancel the dynamic pressure components as much as possible. Unfortunately, this excessive amount of tubing in addition to the size of the plenum cavity cause a large signal lag during data acquisition.

The pressure readings from the plenum were calibrated against the test section free stream static pressure by using a centerline probe. A correction factor was determined to obtain the test section Mach number from the plenum Mach number.

1.10 CENTERLINE PROBE

The Centerline Probe (CLP) is used to give accurate static pressures at various locations along the centerline of the nozzle and test sections. Combined with the temperature and total pressure readings from the charge tube just prior to the nozzle section, these static pressures yield the Mach number at each location.

The CLP contains 42 static ports that spiral around the CLP body from one end to the other. Port number 1 starts 2.5 inches in front of the nozzle section and ports 1 - 6 and 35 - 42 have a longitudinal spacing of 4 inches. Ports 6 - 19 have a longitudinal spacing of 1 inch and ports 19 - 35 a longitudinal spacing of 0.5 inches. Refer to Engineering Drawing 109910VW for more detailed information.

The front part of the CLP is secured in the charge tube with two mounting screws. The rear part is secured in the model support section, where the pressure tubing from the CLP is connected to the outside of the tunnel by means of an instrumentation access port.

2.0 THEORY OF OPERATION -- HIRT

The UTA Transonic Wind Tunnel is a tube type wind tunnel that was suggested by Ludweig in 1955. This type of facility is essentially a blow down wind tunnel with the air storage vessel or vessels replaced by a long supply tube.

2.1 CONCEPT

The basic concept of the tube wind tunnel is shown in Figure 8 where the starting valve is located downstream of the test section. During operation, the tunnel (charge tube, test section, etc.; see Figure 1) is pressurized to a charge tube pressure that is determined from the desired run stagnation pressure. Compressible flow theory dictates the charge pressure, P4, and charge temperature, T4, for a fixed nozzle contraction ratio. In this instance with a contraction ratio of 2.27 and a test section free stream Mach number of 1.0 Po=.73 P4 and To=.91 T4. A change in the nozzle ratio or the desired test section mach number would , of course, alter the total pressure and temperature relationship in the second decimal place. The boundary layer characteristics in the charge tube and test section also will affect these relationships slightly, but are of secondary importance.

2.2 STARTING

After the main starting device (SSV or diaphragm) is opened, the unsteady wave, which moves through the tunnel and sets the high pressure air in motion, cannot establish a steady flow out of the charge tube until flow through the plenum chamber has reached an equilibrium value. This process is illustrated schematically in Figure 12. When the main starting device opens, the total flow rate consists of the combined flow rates entering the test section from the plenum and the charge tube. As the plenum pressure drops and the pressure ratio across the porous walls decreases, the flow rate out of the charge tube must increase to maintain the nearly fixed total flow rate. Eventually the flow rates become steady. This transient nature of the Ludweig tube is termed the starting process. From this description of the tunnel starting process, it can be seen that increasing the flow rate out of the plenum exhaust system during the tunnel start can have a marked effect on the starting time.

2.3 STEADY RUN TIME

The usable run time (about 180 msec) is limited by the charge tube length. This is a result of the time required for the expansion wave generated during the first instant of the starting process to pass through the test section, up the charge tube, reflect at the end and return to the test section. This defines the maximum possible time the test section flow can be at constant aerodynamic flow conditions. Since the starting process is included in this time, the starting time should be minimized as much as possible, thus affording the longest possible testing time.

2.4 AUXILIARY START DEVICES

In the pilot tunnel, three devices are provided to facilitate fast tunnel starts:

1. A plenum exhaust which can be opened independently from the main tunnel exhaust.
2. A controllable plenum exhaust system which can provide an excessive plenum exhaust flow during the starting process and be throttled to the lower exhaust flow required during the steady run.(Flex Flow Valve)
3. A flap system in the tunnel wall which can be opened to increase the flow area between the test section and plenum chamber during the tunnel start.

The plenum exhaust diaphragm is connected by a 6 inch ID line approximately 5 feet in length to the ball valve which controls the quantity of auxiliary mass flow from the plenum during the steady part of the run (see Figure 7).

The design of the flap system allows for two setting during a tunnel run: one for the starting process and one for the steady run mode. The flaps may be actuated during a run by pneumatic cylinders. Their actual effect on the start time, however has not yet been examined experimentally.

2.5 VARIABLES TO TUNNEL CONDITIONS

Once the tunnel has been started as described above, the steady state run conditions are defined by the interaction of the ball valve position when the plenum diaphragm is ruptured (auxiliary mass flow), the ejector flap opening, the wall porosity, the tunnel blockage and the main valve characteristics. The wall porosity and the test section blockage (model cross sectional area) are of secondary importance in determining the mean test section flow and, therefore, will be treated as such.

In order to obtain test section Mach numbers below that possible for a given flap setting and with auxiliary flow, the choke area must be reduced. The 16 inch SSV can have more caps installed to reduce the flow area. At no time should more than 14 caps be open as the choke point moves from the SSV to the diffuser section with more than 14 ports open. The ball valve also become almost ineffective in controllin Mach number with more than 14 ports open.

For test section Mach numbers in excess of those attainable with ejector flaps only, auxiliary suction must be applied (by opening the ball valve). Figure 9 is a graph of this relationship for a wall porosity of 4 1/2 percent and a model blockage of 0 percent. For example, if a test section Mach number of 1.1 is desired, then a ball valve position of 8 with a flap opening of 0.4 inches.

As mentioned earlier, wall porosity and model blockage has some influence on the values predicted from the operating curves. Figure 13 gives the influence of the wall porosity on the test section Mach number for a base porosity of 4 1/2 percent. The decreasing porosity tends to increase the test section Mach number with respect to the 4 1/2 percent porosity curves. As and example, for a ball valve of 8 and flap opening of .4 inches, decreasing wall porosity from 4 1/2 to 1 percent would increase the test section Mach number from 1.1 to 1.15. Tunnel blockage has a less pronounced effect on the test section Mach number for low blockage ratios. For approximately 3 percent or above, the presence of the model may reduce the test section Mach number. Its systematic influence on the test section Mach number has not been defined explicitly. In fact, the experimental observations by AEDC have revealed no systematic variations which can be attributed to model blockage in the 0 to 3 percent range.

3.0 TUNNEL CONFIGURATION

The tunnel configuration should be set according to the requirements for the run to be made. The main factor affecting Reynolds number will be the charge tube pressure. The main factors affecting Mach number for a given test section blockage will be the ball valve setting, ejector flap setting, and wall porosity.

3.1 Ball Valve Setting

1. Determine ball valve position as required by run Mach number.
2. Loosen set screw on handle of Ball Valve and set to desired position. (see Figure 9)

3. Tighten set screw.

3.2 Ejector Flap Ssetting

1. Determine ejector flap setting as required by run Mach number.
2. To increase ejector flap opening: For the individual flaps, turn top of adjustment screw counter clockwise and use a screwdriver between the washers to gently pry the flap open until the desired flap opening is obtained. Make sure that the flap has been opened until the piston has stopped against the adjusting screw before tightening check nut, otherwise, the flap could open further during the run. Tighten check nut.
3. To decrease ejector flap opening: Use the ejector flap spanner wrench to back off stop nut. Then back off check nut. Turn the adjustment screw clockwise until desired opening is obtain. Tighten check nut and stop nut.

3.3 Wall Porosity Setting

1. With access to the inside of the test section, loosen but do not remove all screws connecting the inner plate to the outer plate on each wall.
2. Move outer plate to the required offset.
3. Tighten all screws.

In general, the wind tunnel Mach number depends on the interaction of the ball valve position, ejector flap setting, test section wall porosity, and the charge tube pressure. Although the ball valve setting is the primary measure of the secondary flow, at times and improper diaphragm rupture results in choking of the secondary flow in the location of the diaphragm, thus the actual attainable free stream Mach number will be less than those estimated by the interaction of the ball valve and ejector flap settings. Figures 8 and 9 may be used as guidelines in pre_setting the ball valve and ejector flaps for the desired Mach number ranges. The aforementioned figures are based on a test section porosity setting of approximately 4.5 %. All of the data in the above figures are for proper diaphragm ruptures such that the secondary flow chokes at the ball valve.

3.4 Tunnel Teardown

1. Use wrenches and hammer from the transonic tool box. The rolling tray next to tool box is used to place bolts, etc. on when tearing down the tunnel.
2. Remove any wiring or connections that could be in the way. Place tension in the hoist cable attached to the SSV and diffuser (SSV&D) inside the exhaust sphere.
3. Remove the alignment pins from bolt region directly upstream of the exhaust sphere. This can be done with the hammer and the long rod in the rolling tray. Put one end on the alignment pin and tap the other with the hammer until the pin comes out or loose enough to pull. Be aware that the pin could come flying out of the other end if hit hard enough.
4. Loosen and then remove all twenty bolts and rods. You may need to pick up the end of the diffuser section with the hoist before you are done.

5. Lift the SSV&D and by the hoist enough to clear the mounting bracket in the back. Push the end of the SSV&D into the exhaust sphere. Place a piece of I_beam (which should be found under the sphere opening) in the sphere opening to support the front end of the diffuser. Lower the hoist to allow the SSV&D to rest on the mounting bracket in the back and the I-beam in the front.
6. Loosen and remove the next set of bolts and alignment pins upstream. Do not remove the rods, they are threaded into the tunnel. Hint, it is best to remove the bolts on the bottom last and tighten them down first when reassembling.
7. Pull the instrumentation section (on the stand with rollers) back to clear the threaded rods and then turn it out toward the control board to allow access to the test section.
8. Make what adjustments are required then reverse the disassembly procedure.
9. Place the alignment pins in first when reassembling, although you may need to insert a bolt or rod to help with this.

3.5 Procedure for Removal of 12 inch SSV and O-Ring Replacement

1. Open SSV and leave in open position.
2. Note layout of wiring and hose connections to SSV. (for reassembly later)
3. Disconnect all hoses and wires from SSV.
4. Remove model support section as done for tunnel tear down. Replace two nuts (one top center, one bottom center) on the threaded rods to secure the extra flanges to the test section.
5. Place hydraulic floor jack with short I-beam sections (as spacers) under test section. This supports the test section after model support section is removed. Only necessary when model support section will be removed for long periods of time.
6. Chain the carriage of the model support section to the thrust stand to keep it from rolling.
7. Remove the center four studs on the north side of the test section.
8. Hoist the SSV and Diffuser enough to clear SSV mounting bracket. Remove piece of I_beam from front of the sphere. Roll hoist with SSV&D forward and angle front of diffuser to the north side of the test section (where you removed the studs). Do this until SSV&D has cleared the opening of the sphere.
9. Lower SSV&D, turn perpendicular to test section and move it south over flex flow valve pipe. Angle SSV&D gradually until it is again parallel with the test section. Lower it onto carriage provided being careful not to set it down on any fittings.
10. Raise end of SSV high enough to place a 4x4 under it. Loosen bolts on bottom side between SSV and Diffuser.
11. Hoist SSV&D and remove 4x4. Lower SSV&D back onto carriage. Loosen and remove remaining bolts connecting SSV and diffuser.
12. Note attachment of accumulator and tubing hook ups before removing.
13. Using small blue A-frame hoist pick up SSV by itself by center eye-bolt and set it on cardboard on the floor.
14. Detach hook from center eye-bolt of SSV and hook onto eye-bolt toward

upper flange.

15. Raise SSV enough to be able to lower it back onto the cardboard in a vertical position.
16. Remove hook from eye-bolt.
17. Loosen and remove tie bar nuts on SSV. Use a 3/8" bolt to attach a clevis to the upper end of the pneumatic cylinder on the SSV. Attach the hook from the chain hoist to the clevis.
18. Insert pipe with silver ends labeled SSV tool through opposite ports in lower part of SSV and allow ends to extend under the bottom braces of the A-frame hoist. Raise hoist to pull inner piston out of the outer cylinder.
19. Roll A-frame and piston away from outer cylinder and place cardboard on the floor. When piston is close to cardboard, unscrew piston from shaft of the pneumatic cylinder.
20. Remove SSV piston to a workbench to replace O-rings.
21. Remove the four O-rings from cylinder. De-grease outside with Gunk and rinse with water.
22. After allowing to dry remove all RTV rom O-ring grooves and drilled holes. There are aluminum tools and scrapers for this since any harder metal will scratch the grooves. A drill bit can also be used to clean the holes.
23. De-grease again.
24. After air drying clean with lacquer thinner. This will cause any remaining RTV to expand and loosen more easily. Scrape any remaining RTV then rinse with lacquer thinner again. Allow to air dry.
25. O-rings need to be Parker BUNA-70 with a .210" diameter. In the past the optimal length has been 31 5/8" long.
26. Lift out the SSV outer barrel to check the O-ring between it and the flange it sits in. If it needs replacing: Buna_N, 39 1/2" long by .275"diameter.
27. Wipe out O-ring recess in flange and replace O-ring. Clean bottom of outer cylinder and check for major nicks or scratches in barrel surface. Polish out if any are found. Wipe down inside of barrel with a clean cloth. Replace barrel on flange and O-ring.
28. Place O-rings on the smooth surface between the O-ring grooves (two on each surface).
29. Squeeze a solid line of RTV (Dow-Corning silicone RTV from Arlington Hardware: black can be seen best) into the outside groove farthest from the point the piston is screwed onto the shaft.
30. Move one of the O-rings over the groove. Slowly work it into the groove using pop-sickle sticks until it is seated and most of the RTV is pushed out. The O-ring should be almost flush with the surface (no bubbles of RTV) and the excess RTV wiped away.
31. Make sure that the inside of the outer cylinder has been wiped down with WD-40 to help slide the piston in.
32. Slowly lower first O-ring of the piston into the outer cylinder. More WD-40 may need to be sprayed on O-ring as well as taking a pop-sickle stick to push the it inside the cylinder without any part of it getting cut or pinched off.

33. Fill each groove with RTV separately, insert O-ring, and slide into cylinder until all four rings are inside.
34. Finish pushing piston into cylinder by pushing down on the flange then tightening it into place. Use the tightening order shown by the numbers on top of the rods.
35. Reverse the procedure of removal to place the SSV back into the sphere and close the tunnel.

3.6 Procedure for Removal of 16 inch SSV and O-Ring Replacement

1. Note layout of wiring and hose connections to SSV (so you can reassemble them later)
2. Disconnect all hoses and wires from SSV.
3. Remove the section of electrical conduit with the SSV open and close wires in it along with the wires.
4. Remove the SSV open accumulator mounted on the SSV and the tubes that lead from the accumulator to the solenoids at the downstream end of the SSV.
5. Support SSV with black framed hoist and the diffuser section with the blue framed hoist.
6. Remove model support section as done for tunnel tear down. Replace two nuts (one top center, one bottom center) on the threaded rods to secure the extra flanges to the test section.
7. Remove all the long studs from the test section, but before removeing the last few replace two (one near the top and one near the bottom) with short ones and place a nut on each to secure the extra flange to the test section to avoid dropping the flange in the floor.
8. Chain the carriage of the model support section to the thrust stand to keep it from rolling.
9. Roll the black hoist towards the test section until the nuts and bolts connecting the SSV and the diffuser clear the sphere.
10. Remove the nuts and the studs from the SSV.
11. Lower the diffuser to the floor just downstream of the test section.
12. Use a Blue-Bird hoist to pick up the diffuser over the FFV pipe and place the diffuser out of the way.
13. Roll the black hoist with the SSV towards the test section to remove the SSV from the sphere. The SSV must be angles to the north of the test section and may need to be raised or lowered an inch or two to clear the sphere opening. Watch for the pneumatic cylinder and solenoids at the rear of the SSV.
14. Lower SSV, turn perpendicular to test section and move it south over flex flow valve pipe. Angle SSV gradually until it is again parallel with the test section. Lower it onto wooden cradles provided with pneumatic cylinder to the West being careful not to set it down on any fittings.
15. Use Blue-Bird hoist to hold the end flange and remove all the nuts and studs from this end of the SSV.
16. Screw two studs into opposing holes on the upsteam end of the SSV. Install the section of C shaped iron with two holes cut in it over the bolts (bolts thru

the holes) with the flat surface facing the SSV. Place a nut on each stud.

17. Use the 3 ton hydraulic bottle jack and various lengths of 4" x 4" wood to push the sleeve out of the cylinder until the bolt attaching the flange assembly cylinder to the sleeve is accessible.
18. Remove this bolt and place flange assembly on floor out of way. Use cardboard and blocks to keep it from rolling and being damaged.
19. Remove jack, C-beam, wood, nuts and studs from upsteam end of SSV.
20. Create a basket sling with a chain on the downsteam end of the SSV just under the flange.
21. Place the 3/4" piece slightly under the upsteam end of the SSV.
22. Use the black 1 1/2 ton hoist on the chain sling to raise the SSV to a vertical position (downstream end upward). Set the SSV on the piece of 3/4" plywood.
23. Install the SSV tool (from the Transonic tool box) in the end of the inner sleeve where the end flange assembly was removed earlier.
24. Attach the hoist to it and begin to raise the inner sleeve out of the cylinder. DO NOT RAISE THE OUTER CYLINDER OFF THE FLOOR MORE THAN 2 INCHES. It may be slow.
25. Remove the O-rings from the sleeve.
26. Clean and degrease the sleeve.
27. Cut and glue new O-rings to proper length: Neoprene, .210" diameter, 48 7/8" long. N70, .210"diameter, 46" long (as of September 1997)
28. Coat the O-rings with silicone grease and place them over the three rings near the six O-ring grooves.
29. Place the three upper O-rings (the upper one of each pair on each ring) over the O-ring groove and press into the groove using the O-ring special tool. Try to work it in evenly to avoid streatching the O-ring in places and bunching it up in others. (Begin at about 8-10 places and then work at different places alternating, until it is in).
30. Raise the inner sleeve to above the cylinder and position it just above the cylinder.
31. Apply a bead of curable silicon to the O-ring groove (too much is better than not enough as the excess will squeeze out.
32. Place the O-ring over the groove and install similarily to the previous O-rings keeping the O-ring even around its circumference. Wipe off the excess silicon that squeezes out.
33. Lower the inner sleeve until it begins to slide into the cylinder. Just before the O-ring makes contact lubricate the O-ring with WD-40 and lower the inner sleeve a little more. The weight of the inner sleeve should be enought to force the O-ring in the cylinder if the alignment is good. Continue lowering the inner sleeve until the second O-ring begins to make contact then lubricate it, before sliding it into the cyclinder.
34. Repeat steps 31 thru 33 for the lower O-ring on the other two rings. DO NOT APPLY SILICON TO ALL THREE O-RING GROOVES AT ONCE AS IT WILL SET UP BEFORE YOU CAN GET TO THE LAST O-RING AND GET IT INSTALLED IN THE CYLINDER.

35. After all the O-rings are inside the cylinder check that none of the O-rings are over any ports. If needed, push the inner sleeve in further until none of the O-rings are over any ports. Allow the silicon to cure overnight. Over the weekend is better if the scheduling can be done for a rebuild on Friday.
36. Lower the SSV to a horizontal position using the chain sling. Support the SSV using the wooden cradles.
37. Reinstall the end flange assembly. Four long studs may need to be used to force the inner sleeve further in to allow the end flange to make contact with the SSV.
38. Reinstall the studs and nuts that hold the end flange in place. If the silicon has not had time to cure check to make sure that none of the O-rings are over the ports. If they are air can be hooked up to the SSV to close it, which will ensure no O-rings are over the ports.
39. The SSV can now be placed in the sphere and the tunnel reassembled in reverse order of the disassembly.

3.7 Installation of Boundary Layer Bleed Pipe to FFV and Ball Valve

1. Connect FFV to section of pipe from diaphragm cutter ensuring good contact with gasket all the way around.
2. Pull back (1-2 inches) the downstream portion of pipe that enters exhaust pipe downstream of sphere using come-a-long attached to pipe in concrete outside near silence for supersonic wind tunnel.
3. Attach the pipe section to the flange just outside sphere near ball valve ensuring good contact is made with gasket all the way around.
4. Remove come-a-long from pipe.
5. Attach downstream end of FFV to pipe that is being pulled back.

NOTE: This is a difficult process. The flange joints upstream of the FFV and near the ball valve must be tight. If there is any leakage the Mach number is variable and not controlable. This is the reason the process is done in this order.

4.0 INSTRUMENTATION

4.1 Tunnel Monitoring

The tunnel monitoring instrumentation consists of pressure transducer and a Optoelectronics precision thermometer T-100 temperature transducer (mounted in tunnel wall) and associated electronics to produce and output voltage which is 100 times less than the temperature in Fahrenheit (i.e. 85 degrees is indicated as 0.85 volts). Celsius temperatures are also avaliable by use of a switch on the electronics box (mounted on end of charge tube). Both the pressure transducer and temperature transducer output can be viewed from the control room using the two DVM's. The DVM used for pressure should be set to DC volts and to the 200 mV scale and connected to the right set of banana jacks. The DVM used for temperature should be set to DC volts and to the 2 volt scale and connected to the left set of banana jacks.

4.2 Data Acquisition

4.2.1 Data Acquisition System

The data acquistion system is 12 bit system with 48 channels, each which has its own amplifier and A-D converter. 512 kilosamples can be stored which must be divided amoung the channels being used. Sampling rates can be up to 100 kHz, typically 2 kHz is used for most testing. Temperature measurement capabilities are also available. Indepth manuals on the different modules are also avalable. The configuration of the GPIB card in the computer is available in the filling cabinet HIRT draw is this information is ever needed.

4.2.2 Pressure Transducers

Pressure transducers are available in the black transducer cart in both 200 psi and 500 psi full scale ranges. See pressure transducer calibration sheets or catalog specifications.

4.2.3 13 Probe Total Pressure Rake

A 13 probe total pressure rake with 1/8 OD probes is available for use. Multiple mounting provisions exist to mount it on the traverse mechanism.

4.2.4 5 Hole Conical Probe

Two conical 5 hole probes exist for use. Both can be mounted to the traverse mechanism and to a calibration mount which varies the angle of attack or roll angle.

4.2.5 Centerline Probe

A centerline probe is available which mounts by a mount in the end of the charge tube and one in the model support section. The probe provides pressure readings throughout the length of the test section.

4.2.6 Balance

A Balance is available which mounts in the optical access port on the north sideof the test section. The test section must be reconfigured with special solid side walls. The top and bottom walls are normally left porose. The bottom wall may have to be removed in order to remove the sides. (Hint remove the bottom not the top one for this purpose, it is easier to replace)

5.0 PRE-RUN INSTRUCTIONS

Miscellaneous Information

1. Valves turn clockwise to close if valve or load if regulator.
2. Valves turn counterclockwise to open or unload.
3. Make sure SSV open regulator (RV-3) and close/plenum regulator valve (RV-4) are decreased before first run of day and loading into system.
4. First time to open SSV of the day, set SSV open regulator (RV-3) to 400-500 psi. If it doesn't open then try up to 650 psi.

5. Set close/plenum regulator valve (RV-4) to 300 psi and cycle the SSV (open and close) about 3 to 4 times.
6. The following are what a few of the valves are on the control board.

FVT	Transonic tunnel air flow
FVS	Supersonic tunnel air flow
SV-2	Vent switch
RV-1	Fill switch
PG-4	tells pressure in board from air system
V-3	open for air to reach SSV system
V-8C	flex flow valve (no longer used)
V-8E	opens the sliding sleeve valve (SSV)
V-8G	closes the SSV
V-8I	plenum (diaphragm) cutter
RV	regulator valve
PG	pressure gauge
V	valve (if blue)
V	vent (if red)

7. On the control board, red lines are vent paths and blue lines are air paths.
8. Power supply box in the control room under the computer should indicate 24 volts (4.5 amps when connections are shorted out completing the circuit. Gauge will not indicate current without a closed circuit).
9. Always leave the door open for ventilation when running the computer or power supply.

Overview

1. All electrical equipment should be turned on. This includes data system and control box next to tunnel. These should be unplugged and will need to be plugged into the extension cord from the wall socket. Inside the control room turn on both Digital Volt Meters (DVMs) next to monitor and both auxiliary switches on main power strip in cabinet under monitor. Leave cabinet open while power is on to allow for ventilation. Check that voltage for power supply is 24 Volts and occasionally check amperage (by ammeter) to be sure it is 4.5 A. Turning on all electrical equipment before you start especially if it is cold outside will give it time to warm up and reduce the chance of electrical connection problems when firing and cycling.
2. Setup computer and data acquisition system.
3. Setup up control system.
4. Start air from storage tanks to building. You will need this to cycle the Sliding Sleeve Valve (SSV).
5. Lubricate and cycle the SSV
6. Set all pressures and open appropriate valves on control board.

Electrical Systems

1. All electrical equipment should be turned on. This includes data system and control box next to tunnel. These should be unplugged and will need to be

plugged into the extension cord from the wall socket. Inside the control room turn on both Digital Volt Meters (DVMs) next to monitor and both auxiliary switches on main power strip in cabinet under monitor. Leave cabinet open while power is on to allow for ventilation. Check that voltage for power supply is 24 Volts and occasionally check amperage (by ammeter) to be sure it is 4.5 A. Turning on all electrical equipment before you start especially if it is cold outside will give it time to warm up and reduce the chance of electrical connection problems when firing and cycling.

2. Setup computer and data acquisition system. Plug both into wall outlet. Data accquistion has a electrical line filter that can be used. Power to the DAS cabinet will cause an auxilary cooling fan to begin operating and the bus extender (lower portion of cabinet) to light up with its power light. With computer on and its bus extender on the two bus extenders should indicate they are linked together by indication of the LINK Light. If not check for proper connection of the coaxial cable (the same cable must be connected to both extenders) (more than one cable is available and they are color coded).
3. Setup up control system. Plug into electrical outlet. May need extension cord. Turn on power switch (lower left corner) and set manual - auto switch to manual (lower right side).

SOFTWARE SETUP:

The following steps describe and illustrate how to set up the computer program for the Transonic Wind Tunnel.

1. From C:> type PSPRUN. This will turn on the file manager and execute the PSP data acquisition program. The main menu (F1¬F6) will appear.
    F1 => System Configuration
    F2 => Session Control
    F3 => Data Collection
    F4 => Review Data
    F5 => Hardware
    F6 => Dos Command

2. Press F1 (System Configuration Screen)
    A. Press the F5 key which will load the specified program you choose. (i.e. CONE5 for the five hole probe.)At the location of the cursor, type in the configuration file name and return.
    B. Press F4 to initialize the configuration with the hardware.
    C. Press F10 to exit the configuration section.

3. Press F2 (Session Control)

    There will be three lines for sessions and next to each will be the word close. To write or read you must press the insert button then press the up arrow key. (once for write, twice for read.) Then press the right arrow key and type in the session name. Traditionally a rrTddmmm name has been used. mmm=

three letter initial for month, dd=Numbers for the day, rr=run number, and T to indicate transonic data. If it is a calibration run, the previous convention is preceded by a C. Any appropriate naming convention can be used. Then press return twice so that computer can create session and appropriate configuration (.TCF) file. Then press F10 to exit.

4. Press F3 (Data Collection)
   A. Press F9 three times and set station and channels on the first row.
   B. The sequence should be as follows for the five hole probe
      => Station 6 Channel 1 Station 6 Channel 9.
   C. On that same row where the question appears, Do you want enabled? type in Yes.
   D. proceed to move the cursor to the bottom of the screen where is says Activate menu. (Usually it's easier to press the up arrow key and let it switch from the top to the bottom.) At this point type in Yes.
   E. Press F1 to activate the information just entered and return to the data collection menu.

5. You will now see a screen that shows the function keys (F1_F10) in the bottom right corner. Before any data set F1 must be pressed to start the system. To create a calibration file the data acquisition system will be triggered manually (F2 key). If it is an actual run the fire button will cause the control box to trigger the data system. Press F6 to save the data to the file. Calibration data will contain 3 data sets. To review the data, F5 can be pressed to look at the time trace of the first channel. Press F2 (session control) and close the file by pressing insert and the down arrow key. Then open a new file and proceed to collect data for another run.

Note: When you close a file and open new one you will not need to reconfigure the system in F3, as long as you do not turn off the computer or exit the PSPRUN program.

NOTE: The data system amplifier modules have batteries for backup which have begun to work like capacitors and cause problems during setup. One way to minimize this nusciance is to set up the computer to the point of typing in the configuration file but not return and then powering the data system crate up and then quickly returning to the computer, hit return, and then F4 to initialize the data system. Some of the gains are next to impossible to change one the data system has been on for more than a minute or two.

START AIR TO BUILDING

1. Check that the valves on all three air lines (2400 psi, 1000 psi, and 175 psi) in Northeast corner of tube room are closed.
2. Go to compressor building. If it is a warm day you will need to turn on the box

fan next to the door and the overhead vent fans. The switches to the overhead vent fans are located in the center of the south wall behind the dryer.

3. When you are facing the back of the control board open the far left (east) door. Push in the Panel Pwr breaker (has number 15 on it).
4. Go to compressor in Southwest corner of building. Make sure oil level in sight glass is over half full.
5. Turn on compressor. (big breaker box by compressor label 175 psi compressor)
6. Bleed water from the two separator valves between compressor and dryer.
7. After compressor has started push green buttons to channel air from storage tanks to the lab building. After the green lights come on the air is in the building. The red lights may be broke and may not turn off, don't worry about it. Micro swith located on valve is likely sticking.

SET UP CONTROL BOARD

1. Check that all red vent valves on control board are closed.
2. Check that small regulator on back of control board is isolated by closing valve just to right.
3. Check that all regulators are unloaded fully.
4. Close valves V-02, V-03, V-05, and V-3.
5. Open valves on air lines (2400 psi and 175 psi) in Northeast corner of tube room by door.

CYCLING THE SLIDING SLEEVE VALVE

1. Lubricate the SSV with WD-40. Try to spray around where the O-rings are located.
2. Set the opening and closing pressure on the control board in the tube room. Open valve V-3 for air to regulators. (Open- about 500 psi to start. Turn SSV open regulator (RV-3) to set pressure: Close- about 300 psi to start. Turn close/plenum regulator valve (RV-4) to set pressure.)
3. Make sure SSV open valve (V-8E) and SSV close valve (V-8G) are open and plenum valve (V-8I) is closed. Close any vent valves that may be open and releasing air. Also make sure that the valve above the hatch to the sphere is open.
4. Set switch on control box to manual.
5. Set the SSV open switch on the control box in the up position and press the red button beneath the switch. Continue to press the red button until SSV opens. Opening pressure can be slowly increased until the SSV opens.(If not open by 700 psi then there is a problem.) Then move the switch down.
6. To close the SSV, first close the valve above the hatch to the sphere, then set the SSV close switch to the up position. If it is reluctant to close, it is usually helpful to oscillate the pressure on and off instead of just steady pressure. This pressure can also be increased if necessary. If it doesn't close by 400-450 psi there is a problem that needs to be investigated.
7. Open and close SSV 4-5 times to cycle. This is done to lubricate the SSV every day it is fired and may need to be cycled more frequently if it has set too long

between runs or there is a problem opening.

After cycling the SSV

1. Close the SSV close valve (V-8G).
2. Set control box to automatic.
3. Unload close/plenum regulator valve (RV-4) to 200 psi (This may vary depending on timing of the plenum cutter.)
4. Open V8-I (Plenum Cutter)
5. Set the opening pressure (usually about 600 psi).
6. Verfy the valve above the sphere hatch is open.

6.0 RUN INSTRUCTIONS

Set control system Manual - Auto switch to auto to allow control initiation from control room.

PRESSURIZING THE TUNNEL:

1. Set the pressure of air entering the tunnel by RV-0. Use 400 psi in warm weather and 500 psi in cold weather to help warm the tunnel so that run temperatures will be similar. Use less pressure until a new operator obtains experience (lower pressure is slower and allows one to observe more).
2. Inside the control room there are light type switches on the south wall. These are the fill and vent switches. Remote switches are located in the cabinet with the other HIRT controls. Both the remote switch and the switch on the wall must be on for the valve to work. Control can be accomplished by leaving one switch on and using the other for control.
3. Place the fill switch in the up position and make sure computer is set up properly for run and calibration.
4. The top DVM next to the computer is the temperature in Fahrenheit divided by 100. The lower DVM is for the master transducer and the corresponding pressure can be on the calibration sheet inside the cabinet above. (i.e. 37.41 corresponds to 135 psi.)
5. When ready to fire, over-pressurize the tunnel. Press F1 on the computer from the data collection area, then press the red fire button when the DVM indicates the desired pressure.
6. Promptly press the reset button to reset the control box and cause air to quit flowing to the SSV.
7. Press F6 on the computer to save the data to harddrive per previous instructions.

7.0 POST RUN INSTRUCTIONS

CHECK DATA

Data should be smooth with no sharp spikes or teeth in pressure traces. The total and plenum pressures should start out at the charge pressure and nominally the 1.024 seconds of data will have 100 - 150 ms of that pressure then the pressure begins to drop and then level out at the run pressure for 100 ms or so and then drop towards zero. A saw tooth or a small plateau just below the charge pressure indicates the diaphragm cutter went early. Several plateaus on the way to the run pressure indicates the SSV opened slowly. A plateau just before the run pressure and then another small drop indicates a very late diaphragm cutter while slightly late diaphragm cutter is show up as a small saw tooth or change in slop of the pressure trace just after the pressure begins to fall from the charge pressure.

CLOSE SLIDING SLEEVE VALVE

1. Set the closing pressure on the control board in the tube room, about 250 psi. Turn close/plenum regulator valve (RV-4) to set pressure.)
2. Make sure SSV close valve (V-8G) is open and plenum valve (V-8I) is closed. Make sure that the valve above the hatch to the sphere is closed.
3. Set switch on control box to manual.
4. To close the SSV, first close the valve above the hatch to the sphere, then set the SSV close witch to the up position. If it is reluctant to close, it is usually helpful to oscillate the pressure n and off instead of just steady pressure. This pressure can also be increased if necessary. If it doesn't close by 400-450 psi there is a problem that needs to be investigated.
5. Open the valve above the sphere hatch again.
6. Close the SSV close valve (V-8G).
7. Set control box to automatic.
8. Unload close/plenum regulator valve (RV-4) to 200 psi (This may vary depending on timing of he plenum cutter.)
9. Open V8-I (Plenum Cutter)

NOTE: Always close the valve after running. Do not leave the valve open overnight or for more han a few hours. The O-rings stick after a period of time. The hardware can tolerate much ore force in the opening mode than in the closing mode as the open mode places the ardware under tension while the closing mode places it under compression which could uckle something.

CHANGING THE DIAPHRAGM

1. Mylar diaphragms are kept in a basket on the left side of the tool box for the tunnel. If you run low, more will need to be cut out from the sheets underneath the stair.
2. Check that there is no air pressure on the PEC system.
3. Remove the large black clamp from the plenum manifold and set the front piece on the floor. It is best if the back piece is just pushed back instead of totally removed.
4. Jack up the manifold section with the 'bluebird' crane.
5. Remove the diaphragm with the plates.
6. Separate the plates and remove the burst diaphragm, but not the extra layers of mylar around the edges.
7. Use notch on diaphragm to line up with the extra mylar. The two plates fit together when the red line on each line up.

8. Use plexiglas tool on guard below the clamp to push the arrowhead back down into the slot until it clicks. Line up arrowhead with the color coding, but it may be still be hard to push in .
9. Visually inspect the O-rings for damage.
10. Place diaphragm and plates on top of the opening. Exact placement isn't necessary because tightening the clamp will put it and keep it in place.
11. Pull the back piece of the clamp up and loosely bolt on the front. Tighten the bolts and make sure not to tighten one side totally before the other.

Note: If the cutter needs to be sharpened, the cutter can be unscrewed and sharpened with a knife sharpener.

Miscellaneous Information

1. Valves turn clockwise to close if valve or load if regulator.
2. Valves turn counterclockwise to open or unload.
3. Make sure SSV open regulator (RV-3) and close/plenum regulator valve (RV-4) are decreased before first run of day and loading into system.
4. First time to open SSV of the day, set SSV open regulator (RV-3) to 400-500 psi. If it doesn't open then try up to 650 psi.
5. Set close/plenum regulator valve (RV-4) to 300 psi and cycle the SSV (open and close) about 3 to 4 times.
6. The following are what a few of the valves are on the control board.
    FVT-Transonic tunnel air flow
    FVS- Supersonic tunnel air flow
    SV-2 Vent switch
    RV-1 - Fill switch
    PG-4 - tells pressure in board from air system
    V-3 - open for air to reach SSV system
    V-8C - flex flow valve (no longer used)
    V-8E - opens the sliding sleeve valve (SSV)
    V-8G - closes the SSV
    V-8I - plenum (diaphragm) cutter
    RV - regulator valve
    PG - pressure gauge
    V - valve (if blue)
    V - vent (if red)
7. On the control board, red lines are vent paths and blue lines are air paths.
8. Power supply box in the control room under the computer should indicate 24 volts (4.5 amps when connections are shorted out completing the circuit. Gauge will not indicate current without a closed circuit).
9. Always leave the door open for ventilation when running the computer or power supply.

SHUTDOWN CONTROL BOARD

1. Close the valves on all three air lines (2400 psi, 1000 psi, and 175 psi) in Northeast corner of tube room.
2. Open valves V-02, V-03, V-4B, V-05, and V-3.
3. Open all red vent valves on control board.
4. Isolate the small regulator on back of control board by closing valve just to right.
5. Unloaded fully all regulators.

STOP AIR FROM COMPRESSOR BUILDING:

1. Push red buttons on control board in compressor building to stop air flow from the storage tanks to the building.
2. Shut breaker off for 175 psi compressor.
3. Bleed water out of separation valves.
4. Turn power off to control board by pulling the panel power button out on back of control board.
5. Turn off all lights and fans.

8.0 COMPUTER PROGRAMS AND DATA FILES

The following is a list of fortran programs and their descriptions. The executable files have the same suffix and the .EXE extension. The newest versions of the files will either be located on the computer hard drive or on a backup diskette labeled PSP Data Reduction Files. Older, unused source codes can be found on a similar diskette labeled Old Version (5 1/4").

BALANCE.FOR

requires:	BALRUN.DAT	generates:	BALUNCF.UCF
	AMPLIF.DAT		BALOUT.DAT

Program to reduce the ASCII balance data into forces and moments. Five channels of balance data with a time index are contained in BALRUN.DAT. The Program is specialized to be used with the side wall balance for the transonic tunnel.

BALTIME.FOR

This program takes balance data that has been separated from the pressure data and installs a time index. This program is no longer needed because CVRTBAT.FOR will now place a time index when separating the data into pressure and balance files.

PSPASCIM.FOR

required to link with compiler: FILEMGR.LIB
LCBINC.FOR
SCBINC.FOR
DCBINC.FOR

requires: DTNAME

File manager to be on (BTRIEVE/M:32/p:1024 at prompt before running PSPASCIM) Turn off file manager after running PSPASCIM by running BTRVSTOP at prompt session file with .TCF and .TDT extensions (will be created from PSP session)

generates: (session name).(numeric channel extension)

This program will convert PSP session files to ASCII format with no user interface. DTNAME will contain the name of the session.

CVRTBAT.FOR

requires:		generates:	
	DTNAME		INPUT.DAT
	CHANNEL.DAT		BALRUN.DAT
	session files with numeric extensions.		

Program to separate ASCII pressure data from balance data and place them in a usable matrix form for final reduction. If used again with temperature data, it will need to be edited to include transferring the temperature to INPUT.DAT

REYNOLDS.FOR or REYNOLDM.FOR

Program to correct Reynolds number from HIRT program. No longer necessary because correct Reynolds number is calculated in HIRTREYM.FOR

HIRTREYM.FOR

requires:		generates:	
	CHANNEL.DAT		PRESS.DAT
	INPUT		PRSRAT.DAT
	SPCALIB.DAT		
	CPDVM.DAT		
	CH.DAT		
	INPUT.DAT		

Program takes digital pressure and temperature data to generate the actual pressures in PSIA, Mach number, and Reynolds number. Data channels must be in order as follows: data channels specific to experiment, plenum pressure, charge tube static pressure, total pressure, and temperature.

NOTE: Data taken after 01 May 1996 contains four separate Plenum pressure channel of data. The most recent version of the data reduction programs take this into account. Data before 01 May 1996 contain only one channel of Plenum pressure data.

HIRTREYS.FOR

Version of HIRTREYM.FOR where the input data has no channel for temperature. This is most important for data taken in 1991 or before. After that time all data should include a temperature channel.

BULKBAT.FOR

requires: user interface	generates:	RAKEBELL.BAT

Program to generate a batch file that when executed will convert all raw PSP data to final pressure, etc. time history data. It is an interactive program that takes minimal time.

PRSAVG.FOR

required:INPUT.FLE	generates:	LOG.DAT BELLDAT.DAT BELLDEV.DAT BELLDAT.RAT BELLDEV.RAT

This program takes final time history data, finds the steady run time, then prints out the averages. It also creates a run log that will tell when the steady run data was averaged. Because of the variation in the data this method is not foolproof. It must be verified. This can be done by looking at LOG.DAT as well as the standard deviation in the output files. The standard deviation will normally be large for the plenum pressure because there is a lot of lag in the system. If this program is executed when BELLD??.??? exits it will not erase the appropriate files but will write to the end of them. This program is interactive only when it is in manual mode where the time ranges for averaging are entered. It is set up mainly for pressure data, but can also handle pressure ratio data. The tolerances may need to be adjusted to get best results. Suggestion: edit the program to allow the tolerances to be read from a file so that the program will not have to be re-compiled to change them.

DATA FILES

CHNAME

File contains the session name for the calibration data. Must be eight characters.

DTNAME

Contains the session name for the general data files. No more than eight characters.

PRESS.DAT

Contains the final time history data from pressure information. All pressures are in PSIA. Data is in the order that follows: Time (ms), Plenum cavity pressure, Charge tube static pressure, Charge tube total pressure, Test section Mach number, Reynolds number (per inch), Pressures of attached ports in the order they are fed into data system.

PRSRAT.DAT

Contains the final time history data of the pressure ratios of each extra pressure channel with respect to total pressure.

LOG.DAT

Log file from PRSAVG that will give the name of the data file and the average time for steady run data that was recorded.

BELLDAT.PRS
BELLDEV.PRS
BELLDAT.RAT
BELLDEV.RAT

Data files that can be generated from PRSAVG. Files with the .PRS extension are pressure data and .RAT extension is the ratio data. The entries in the files are in the same order as PRESS.DAT and RATIO.DAT respectively. Files that have DEV in the prefix also include the standard deviation. The order is the same except that the actual number appears directly followed by its SD.

RAKEBELL.BAT

Batch file that should be executed and will batch all necessary programs and files to generate final data.

INPUT.FLE

Input file to PRSAVG. Must be user created.
Format is as follows: type, # ranges, # points/set, manual/auto, full name of data file(s) to process. The data type is 1 for pressure or 2 for ratio data. The # ranges corresponds is 1 if only primary data is desired or 2 if secondary steady data is desired as well.(If a well defined secondary run time cannot be found it will be indicated in the run log.) # points per set will always be the 3 more than the total #

of pressure channels. Choose 1 if the averaging range will be entered manually, otherwise enter 0. All data file names will be one to a line.

BALRUN.DAT

File created by CVRTBAT as input to BALANCE. Contains the raw ASCII balance data.

AMPLIF.DAT

File as input to BALANCE that contains the amplification data for the side wall balance.

BALUNCF.UCF

Uncorrected balance data. Only generated to verify there are no anomalies with balance.

BALOUT.DAT

Force and moment time history data from the side wall balance. Order is as follows: Time, Normal Force, Moment about X_axis, chordwise Force, Moment about Z_axis, and the Pitching Moment. Forces are in pounds; moments are in pound-inches.

session.001

ASCII form of data from channel 1. Generated from PSPASCIM and used in CVRTBAT or CVRTBATM.

session.TDT

Raw data in PSP form from the PSP data acquisition program.

session.TCF

Configuration file. Contains the system configuration data for the appropriate session. It will be the same for each session of the same type of data taken. At least one session.TCF needs to be kept for storing data, but others may be erased after PSPASCIM has been executed to save memory.

session.TDX

Index file. Can be created by opening the session in PSP to read or PSPASCIM will create it when needed. Can be erased after data reduction scheme.

INPUT.DAT

File generated by CVRTBAT or CVRTBATM that contains the ASCII data in a matrix form that can be used by HIRTREYM. Data includes all pressure and temperature channels.

INPBAL.DAT

File generated by CVRTBAT that contains the five channels of balance data. File is input to BALANCE.

CHANNEL.DAT

Contains the channel arrangement data from the data system. This file must consist of 48 zeros or ones followed by the number of channels used. All the ones must be at the beginning of the file and total to the number of channels used. The FORTRAN format is as follows (32(I1,1X)/16(I1,1X),I2).

INPUT

Contains following system information. atmospheric pressure(14.7 PSI), time delay for numbering data sets(0.0), Mach # correction(0.050), temperature (minimal importance), control integer(2), Mach number control integer(1), number of samples per calibration (24). Format is as follows:
(F5.2,1X,F5.1,1X,F5.3,1X,F5.1,1X,I1,1X,I1,1X,I2)

SPCALIB.DAT

Pressure transducer calibration information. Will not need to be changed unless master transducer is recalibrated.

CPDVM.DAT

Three master transducer readings at which the daily calibration data will be recorded. Usually at 15.00, 20.00, and 25.00 for 135 psig charge tube pressure.

CH.DAT

Final calibration data generated by CHCVRTM that will be used in HIRTREYM.

PRSCHN

Data file with single number corresponding to # of pressure channels.

Precision Thermometer Accessory T-100

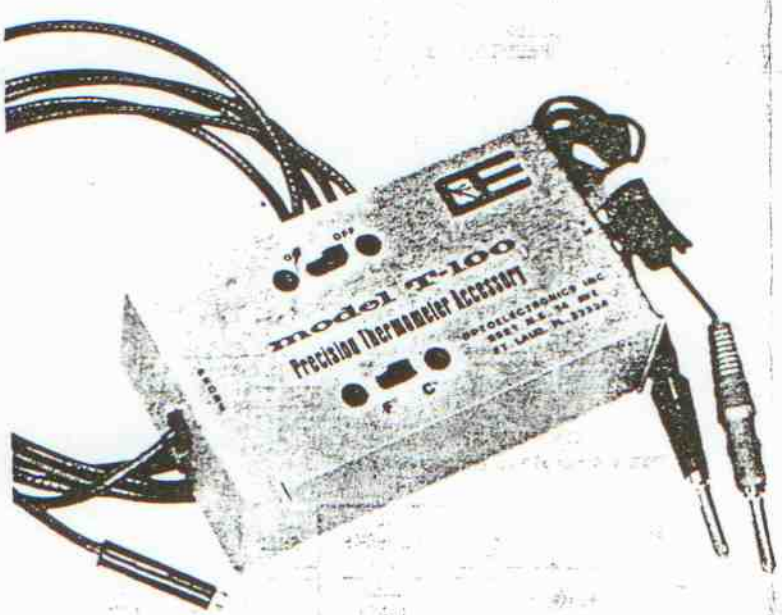

OPTOELECTRONICS, INC.
5821 N.E. 14 AVE, FT.LAUDERDALE
FLORIDA 33334
PHONE (305) 771-2050

HOW OFTEN HAVE YOU WORRIED ABOUT a component that was running hot to the touch? The part could be safely within specifications or in danger of burning out. If you include a digital thermometer as part of your test gear then you simply measure the component's temperature and check the data book for temperature limits. The capability to reliably and accurately measure temperature can also help to get a handle on more complex temperature problems such as specifying heat sinks, crystal oscillator drift and op-amp stability.

Several major manufacturers of digital multimeters now offer a thermometer option built in or as a separate accessory. Now you can build a simple thermometer conversion circuit for your digital voltmeter that is as good as any and better than most of the commercial units and at one-third the cost.

The temperature sensor is an integrated circuit developed by Analog Devices Inc. as a precision temperature-dependent current source. Of the many advantages this sensor enjoys over others, its accuracy of 0.5° and its range of from −55° to +150°C are most impressive. Because it is a current source with only two active leads, the sensor is virtually free from noise pickup even when remoted over hundreds of feet of cable. Its tiny TO-52 metal-can transistor package allows for fast temperature response. Other features will be apparent as we use the temperature sensor to build the T-100 direct-reading thermometer.

The T-100 has a 10 mV-per-degree output that enables any digital or analog voltmeter to directly read Fahrenheit or Celsius by the flip of a switch. Resolution is to 0.1° with a 3½-digit voltmeter and to 0.01° with a 4¼-digit meter. Total current consumption is about 3 mA, giving the T-100 many hours of operation from an inexpensive 9-volt battery.

While we have mentioned only electronics, the T-100 is ideally suited for a wide variety of other applications. Simply dedicate a voltmeter to exclusive use and you have a thermometer to monitor inside, outside, aquarium, swimming pool, greenhouse, darkroom chemical, freezer, cooking, air conditioning and an almost infinite list of other temperatures.

Circuit description

Figure 1 shows the AD590K temperature transducer's linear current output of 1 μA per degree Kelvin. The Kelvin degree is the same size as a Celsius degree; however, the Kelvin temperature scale is 273.16° higher than the Celsius scale. Zero degrees Kelvin is called absolute zero because it can be shown that colder temperatures cannot exist. There is also an absolute Fahrenheit temperature scale (Rankine) that is 459.69° higher than the regular Fahrenheit scale.

Figure 2 is the schematic of the thermometer accessory. The transducer's output current is scaled by the combination of resistors R10 and R11, or by R8 and R9 depending upon the position of the CELSIUS/FAHRENHEIT switch S1. The voltage developed across scaling resistors R8 and R9 is equal to 10 mV per degree Kelvin or 10 mV per degree C + 2.73 volts. Similarly, the voltage across the R10, R11 combination is equal to 10 mV per degree F + 4.59 volts. These output voltages follow naturally from the Kelvin to Celsius and Kelvin to Fahrenheit conversion equations:

T Celsius = T Kelvin − 273.16°

T Fahrenheit = 9/5 T Kelvin − 459.67°

To read Celsius and Fahrenheit directly we must generate reference voltages of 2.73 and 4.59.

The LM334Z is a precision current source with a 2-mA output that is set by resistor R1. The current output is used to bias a LM329DZ precision 6.9-volt temperature compensated Zener reference.

This device is actually an integrated circuit with many advantages over the usual Zener diode. A big advantage is the low current level required (1 mA) for stable operation. The IC1/IC3 combination provides a very stable, low-power voltage reference for the voltage dividers. The voltage divider formed by R2, R3 and R4 generates the 2.73-volt reference and the divider formed by R5, R6 and R7 generates the 4.59-volt reference. The correct reference is selected by the switch S1 and connected to the "minus" output terminal. The thermometer's output then is the voltage difference between the + and − output terminals.

Construction

Assembly of the thermometer circuit

board is simple and straightforward. The foil pattern for the PC board is in Fig. 3 and the components placement is shown in Fig. 4. Trimmer resistors R3, R6, R9 and R11 are mounted on the foil side of the PC board. The thermometer shown here uses a custom aluminum enclosure for the circuit board and battery. The two slide switches were installed in the cabinet top and the PC board aligned for proper fit with the cabinet bottom before soldering. Grommets were fitted in each end of the cabinet top. Small diameter coax cable was inserted in the hole labeled PROBE and zip cord in the hole labeled VM in the cabinet top. The coax center conductor and shield are soldered to the PC connections labeled SIG and SHLD, respectively, in Fig. 4. The zip cord is soldered to the holes labeled OUT with the red banana plug soldered to the "+" wire and the black banana plug to the "−" wire. The 9-volt battery snap is connected to BATT holes with the red wire soldered to "+" and the black wire to "−."

The AD590K sensor was prepared by cutting off the case lead and staggering the + and − leads leaving the + lead longer. Figure 5 shows a cross section of the probe assembly. The sensor leads will not short together if the coax conductor and shield are staggered to match as shown. The shield lead is connected to the sensor's + lead. The sensor is soldered on the end of the coax and the connection potted in with epoxy glue to make it waterproof. A nylon shell was used to house the coax connection and provide a seal for the sensor. The shell was slid over the free end of the coax with the larger diameter end going on the cable first.

A 5-minute setting epoxy is used to pot the sensor. A very small amount was mixed and an even coat applied to the bottom of the sensor. The sensor was then held tightly against the end of the nylon shell and kept centered until the epoxy became set.

Next, an amount of epoxy to sufficiently fill the probe was thoroughly mixed. The probe tip was held down and epoxy was applied between the shell and coax using a toothpick. The epoxy flows down

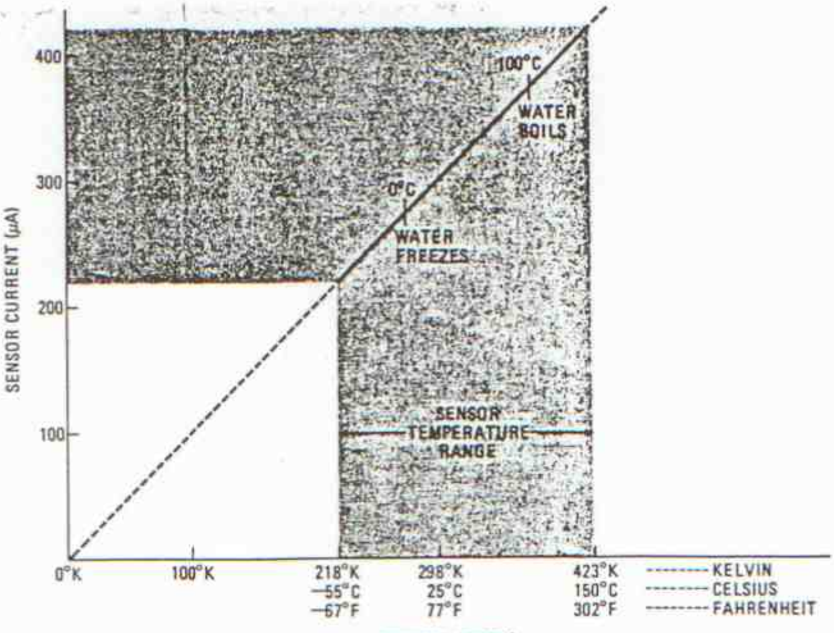

FIG. 1—CURRENT OUTPUT of the AD590 is linear at 1 μA per degree Kelvin.

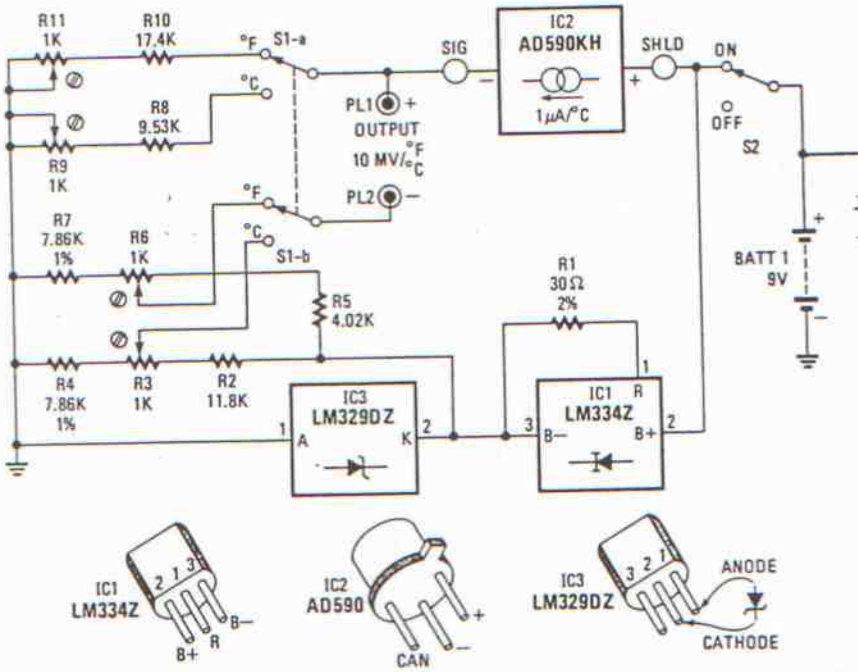

FIG. 2—SCHEMATIC OF THE T-100 thermometer accessory for a digital voltmeter. The circuit is essentially a resistive bridge with the temperature sensor as one of its legs.

T-100 PARTS LIST

1	AD590K	U2
1	LM329DZ	CR1
1	LM334Z	U1
1	30 Ohm 2% (Orange-Black-Black-Red)	R1
1	11.8K Ohm 1% (Brown-Brown-White-Red)	R2
4	1K Ohm Trimmers	R3, R6, R9, R11
2	7.86K Ohm 1%	R4, R7
1	4.02 K Ohm 1% (Yellow-Black-Red-Brown)	R5
1	9.53K Ohm 1% (White-Green-Orange-Brown)	R8
1	17.4K Ohm 1% (Brown-Violet-Yellow-Red)	R10
2	DPDT Slide Switches	SW1, SW2
1	.01 uF Disc Capacitor	C2

2	9 Volt Battery Snaps
2	Banana Plugs (1 Red, 1 Black)
4'	RG 174 Coax
2'	Zip Cord
1	Nylon Probe Shell
1	Custom Aluminum Enclosure
6	4-40 x 1/8" Flat Head Machine Screws
4	Self Stick Rubber Cabinet Feet
2	¼" Grommets
1	PC Board
1	Self Stick Foam Pad

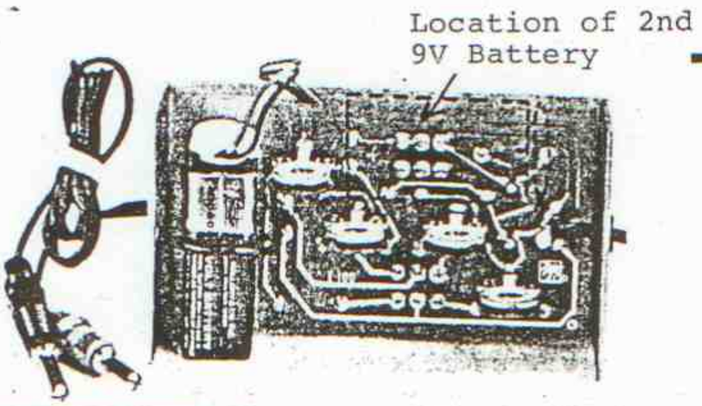

DIGITAL THERMOMETER with rear cover removed shows internal layout. Note four trimmers are mounted on foil side of PC board.

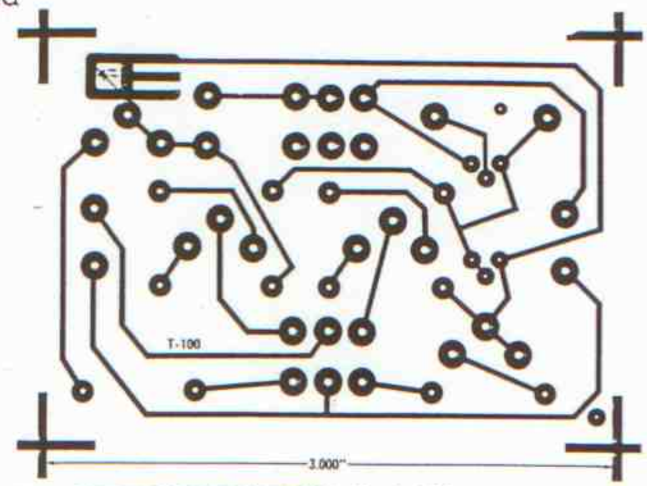

FIG. 3—PRINTED CIRCUIT PATTERN for the digital thermometer accessory.

the coax and into the space inside the shell. Tapping the probe tip on the table helps the epoxy flow. As the probe space fills, the epoxy seeps out of the vent holes in the sides of the shell. Any excess can be wiped away. Keep the coax centered in the end of the shell while the epoxy sets. Allow the epoxy to cure overnight before subjecting the probe to mechanical stress or excessive temperatures.

(The plastic probe shell is made from a 1-inch-long ¼-inch O.D. plastic spacer with one end counterbored to accept the outside diameter of the RG-174/U coaxial cable. (See Fig. 5.) A reasonably good substitute can be made using ¼-inch O.D. shrinkable tubing. Connect the cable to the sensor and fill the void in the tubing with the potting compound. When the compound has fully cured, apply just enough heat to shrink the tubing.—*Editor*)

Calibration

The voltage reference in the thermometer can be more stable than the internal voltage references in some digital voltmeters. Calibration should be done with the voltmeter that will be used with the T-100.

Connect the negative voltmeter lead to thermometer ground. The center lugs (wipers) on trimmers R9 and R11 are grounded as is the black (negative) battery lead. Connect the voltmeter's positive lead to the center terminal on trimmer R3 and adjust R3 to read 2.73 volts. Move the voltmeter's positive lead over to the center terminal of trimmer R6 and adjust R6 to read 4.59 volts.

The thermometer's output is linear so calibration for the entire range can be performed at one known temperature. Although the AD590K had 0.5° linearity over its entire range, we have found that it is even more accurate between 0° and 100°C. This means that to realize the accuracy potential of the device, we should have a temperature standard accurate to 0.1°C or better. Certified thermometers accurate to 0.1° are expensive and not readily available. For calibration we must then rely on some less precise methods.

Method 1. A 50% mixture of water and crushed ice that is well stirred in a styrofoam container should come to equilibrium within 0.5°C of 0.0°C in 15 to 30 minutes.

K-11

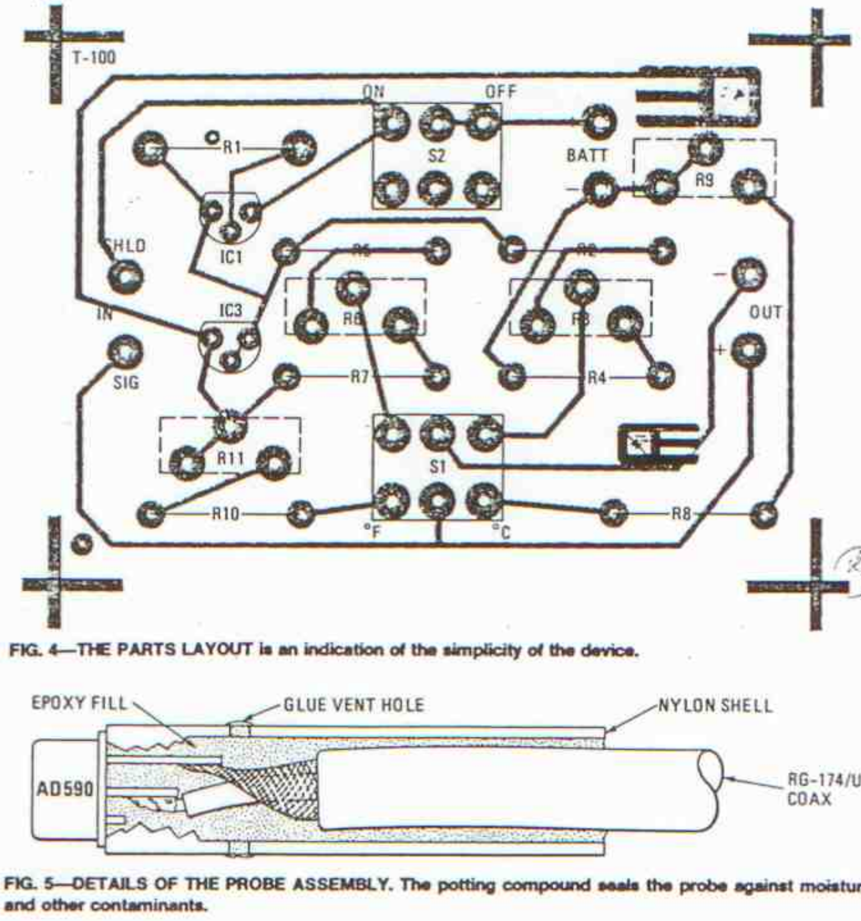

R3

R9

FIG. 4—THE PARTS LAYOUT is an indication of the simplicity of the device.

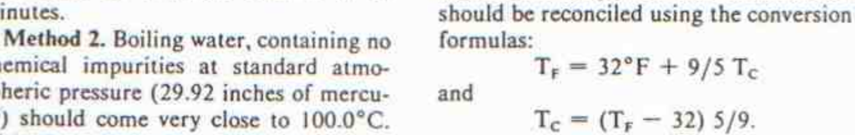

FIG. 5—DETAILS OF THE PROBE ASSEMBLY. The potting compound seals the probe against moisture and other contaminants.

Method 2. Boiling water, containing no chemical impurities at standard atmospheric pressure (29.92 inches of mercury) should come very close to 100.0°C. Altitude and pressure corrections must be made.

Method 3. A good-quality accurate clinical thermometer can be used to compare readings within its range. Errors arise in reading the thermometer as well as from trying to have two different sensors track a changing temperature when they have differing time constants.

After calibration, the Celsius and Fahrenheit ranges on the thermometer should be reconciled using the conversion formulas:

$$T_F = 32°F + 9/5\, T_C$$

and

$$T_C = (T_F - 32)\, 5/9.$$

This completes the construction and calibration, and your thermometer accessory is ready to use. At first you'll probably have just one or two applications but as you become more familiar with it, the digital thermometer will become increasingly valuable.

NOTE: The LM334Z and LM329DZ are identical in appearance and their correct positioning should be checked before applying power, otherwise these parts will be internally destroyed. Solder shorts on the PC Board can irreversably dammage these parts.

Installation of Second 9V Battery

The addition of a second 9V battery in series with the first more than doubles battery life as well as allows the sensor to maintain enough voltage across it to generate the current levels required for large Fahrenheit temperature outputs.

The second battery fits in the case on top of switch S1. Clip excess switch terminal leads and then place the piece of double stick foam material on top. Use a piece of scotch tape on the side of the battery that will rest against trimmers R3 and R6

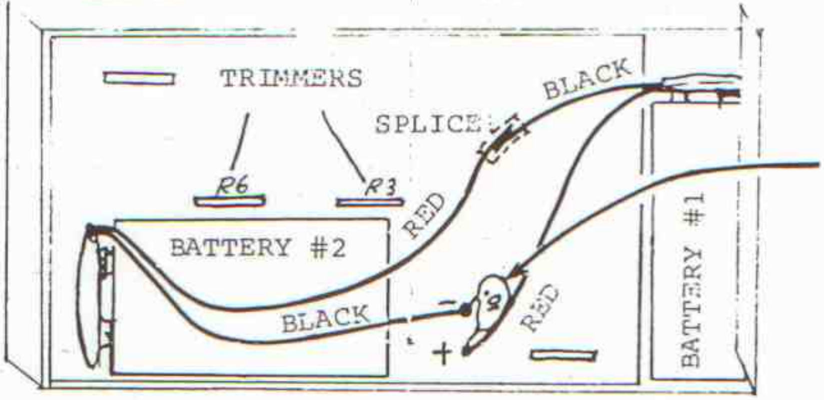

Add a .01uF cap in the same holes as the + & - leads from the batteries.

Alternate Probe Construction

Even a small amount of water leakage can cause output errors. Because the nylon shell technique described in the article can be tricky we suggest the method shown below because it works well every time.

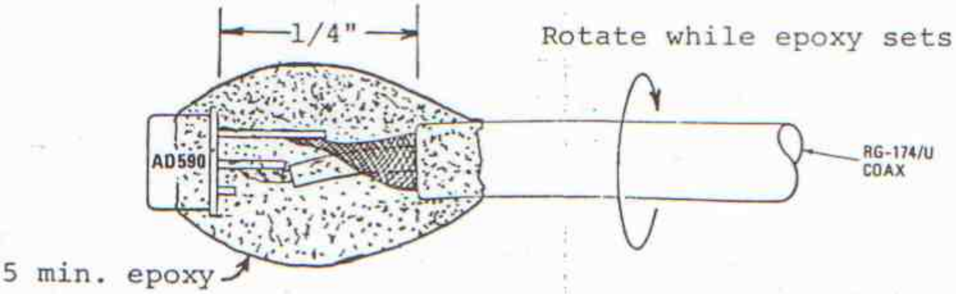

1. Solder the sensor to the coax with leads as short as possible.
2. Apply five minute Epoxy and rotate coax until epoxy sets. The epoxy forms a symmetrical seal around the connection. Notice that the epoxy goes over the transistor skirt.

OPTOELECTRONICS, INC.
5821 N.E. 14 TH AVENUE
FT. LAUDERDALE, FL. 33334
PHONES: (305) 771-2050/2051

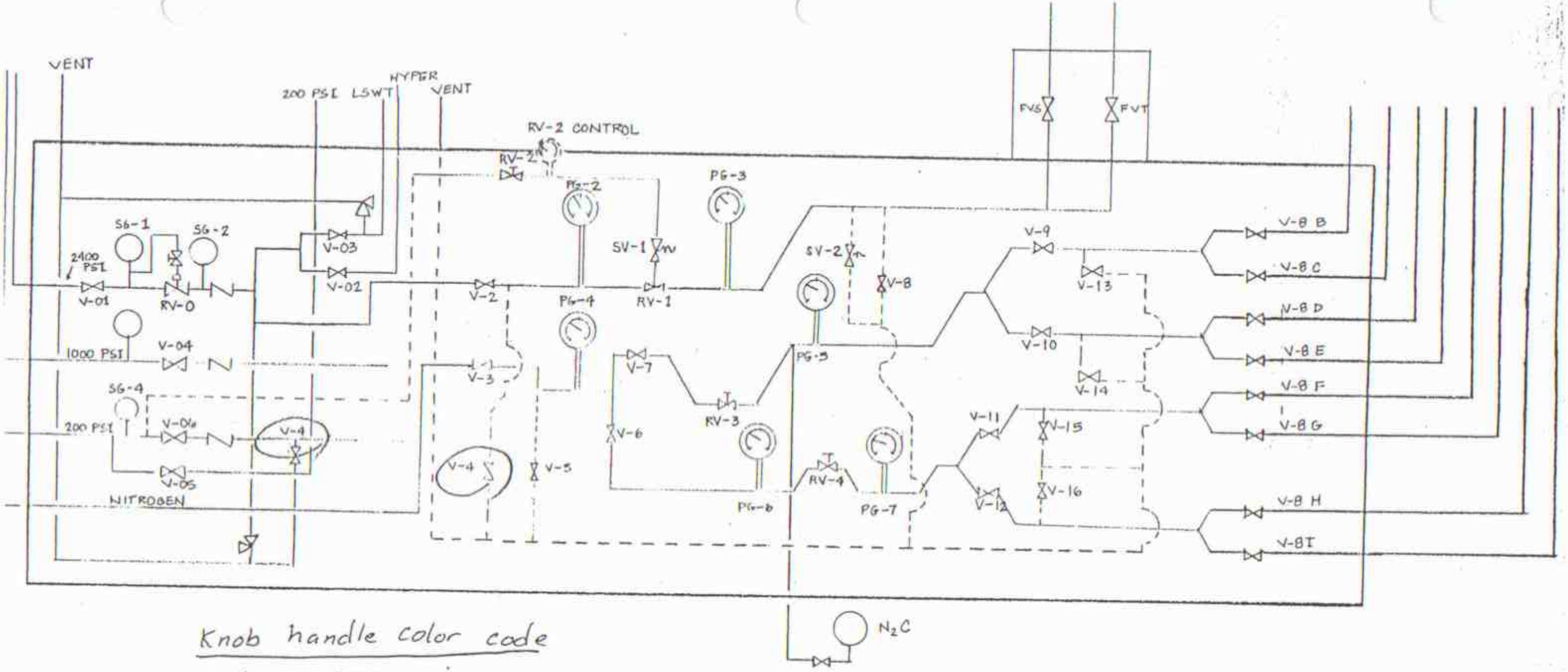

Knob handle color code

yellow = 2400psi
Silver = 1000psi
Blue = 175psi + Nitrogen & now 2400 psi supply
Red = vent

Diagram of Computer/
Control Room Electronics
for Transonic Tunnel.

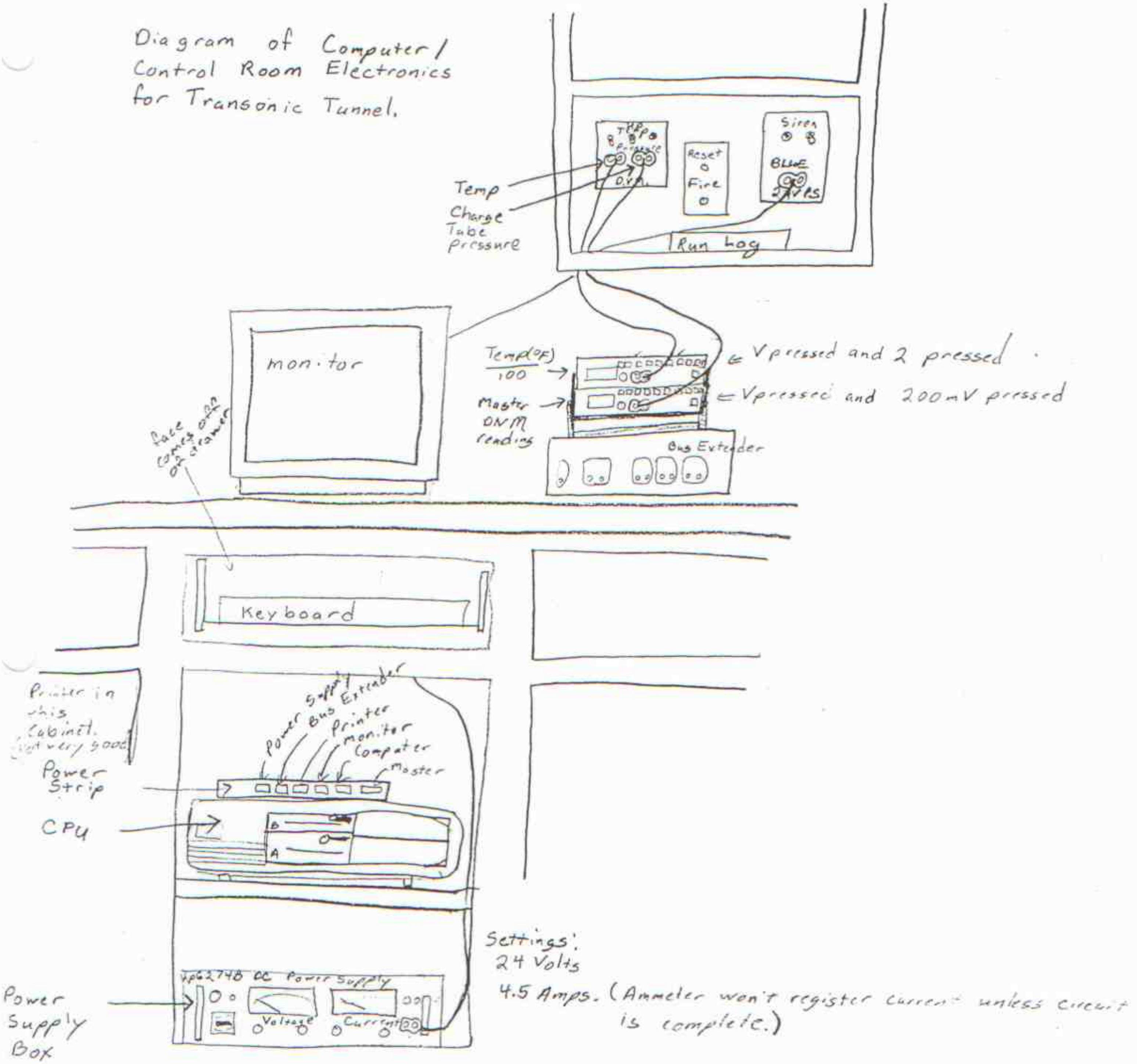

Settings:
24 Volts
4.5 Amps. (Ammeter won't register current unless circuit is complete.)

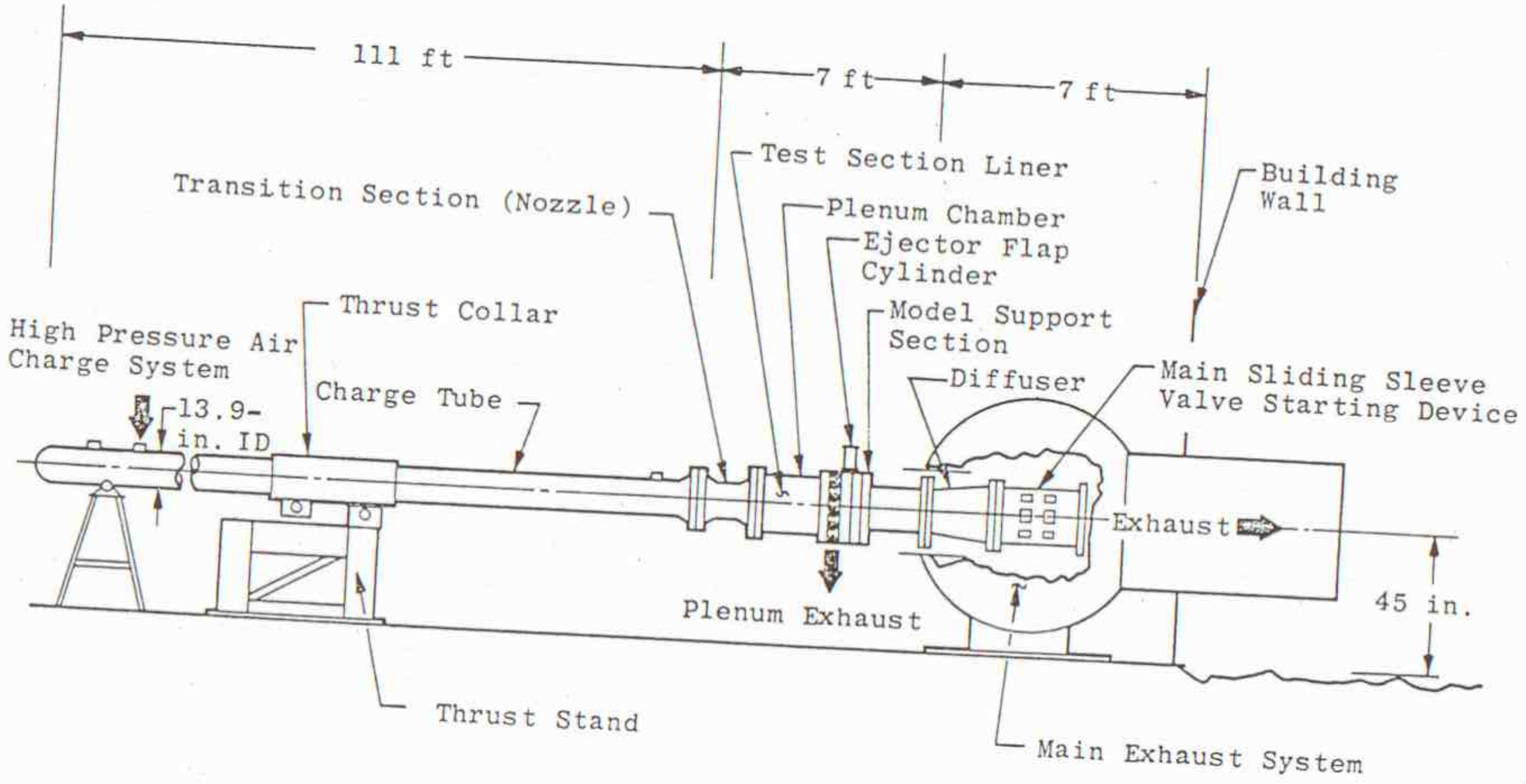

Figure 1. Pilot HIRT elevation line drawing.

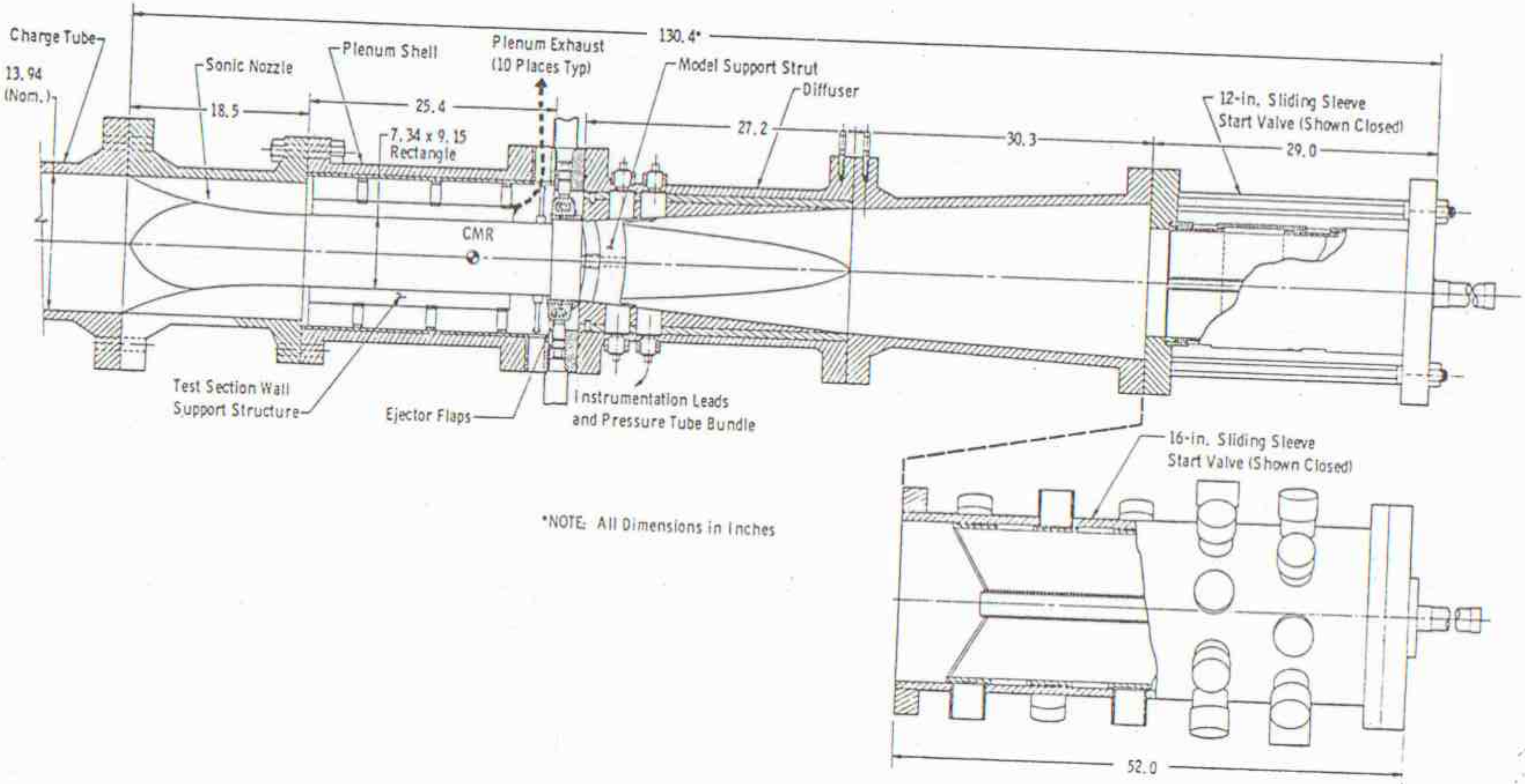

Figure 2. Cross sectional view of nozzle, test section, diffuser, and main valve system.

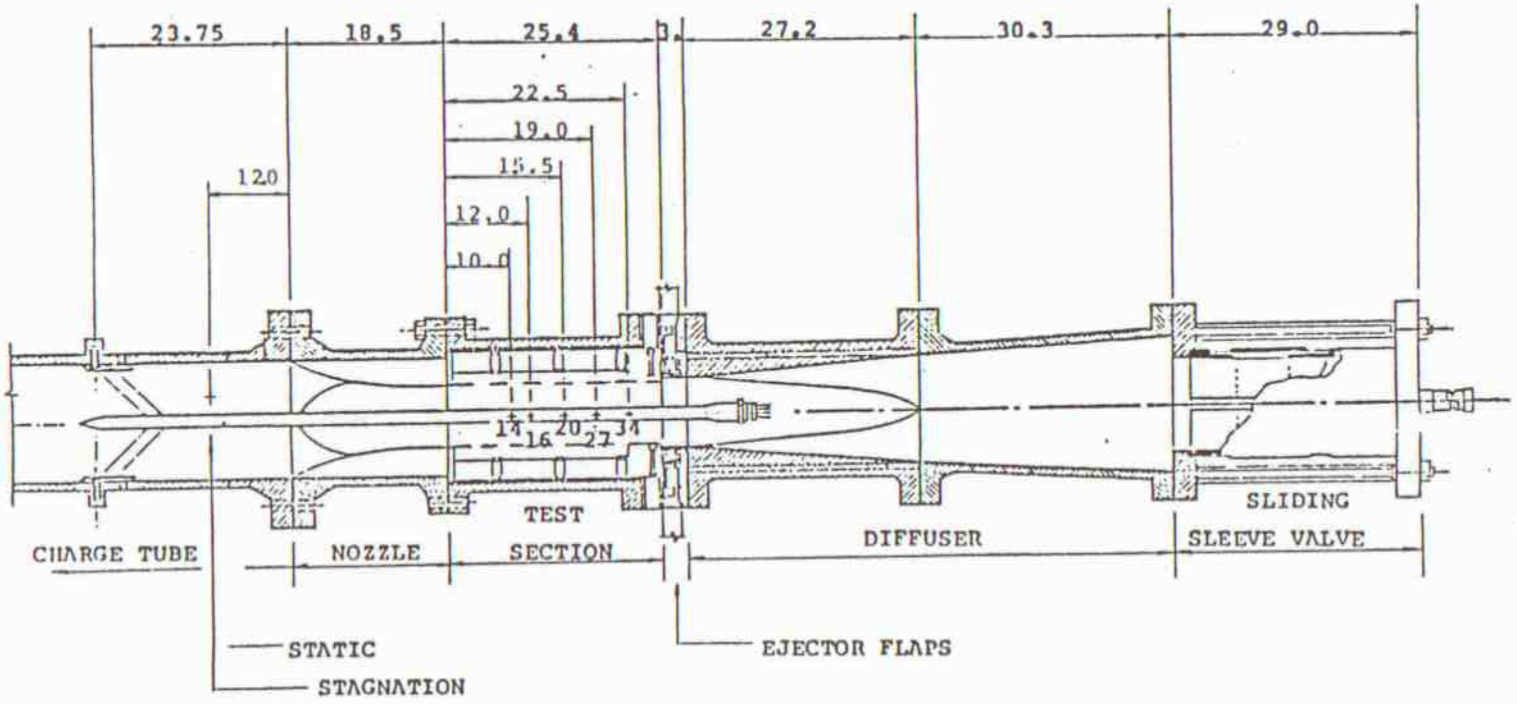

Unit: Inch

FIGURE 4 CENTERLINE PROBE INSTALLATION

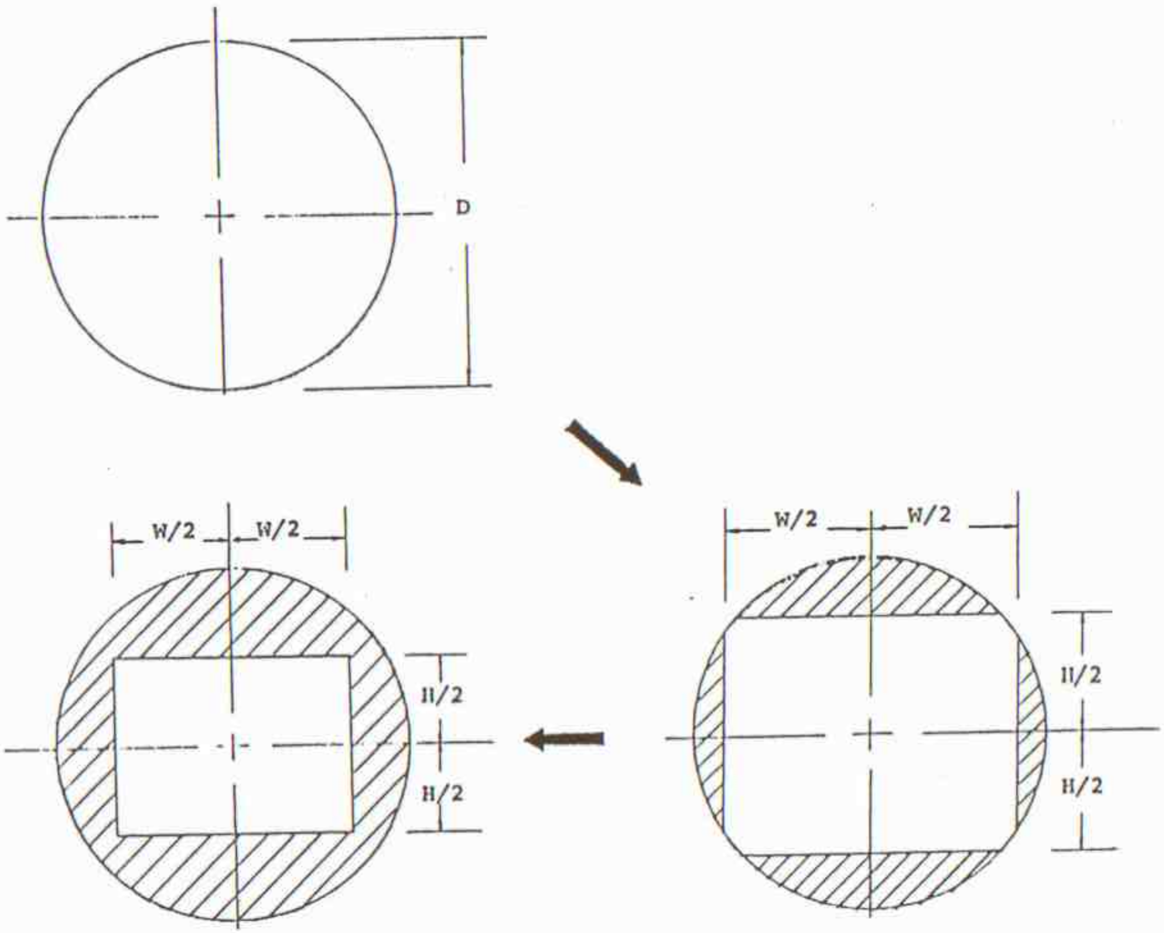

FIGURE 3 CROSS SECTIONAL VARIATION OF NOZZLE

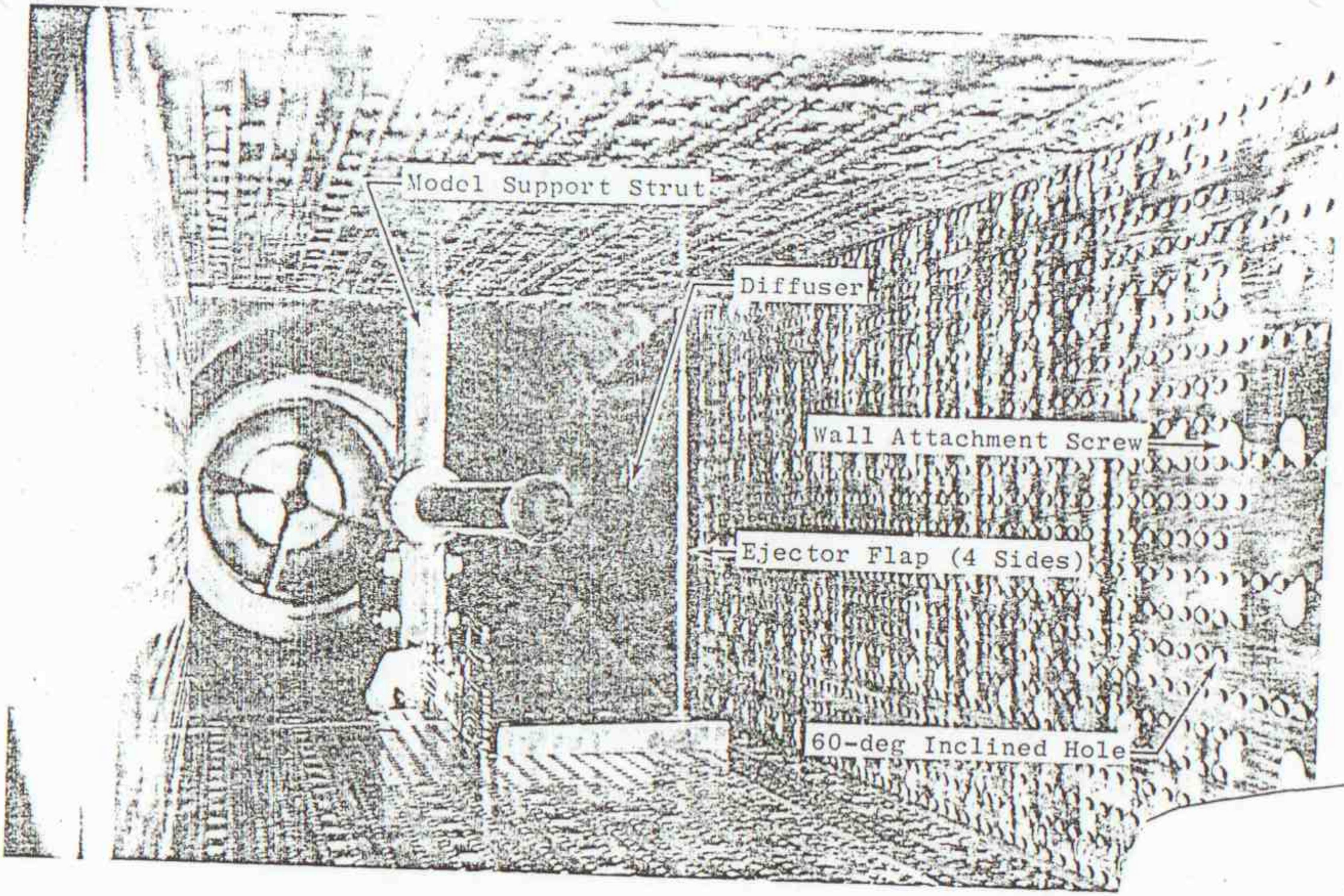

Figure 3. Interior view of Pilot HIRT test section.

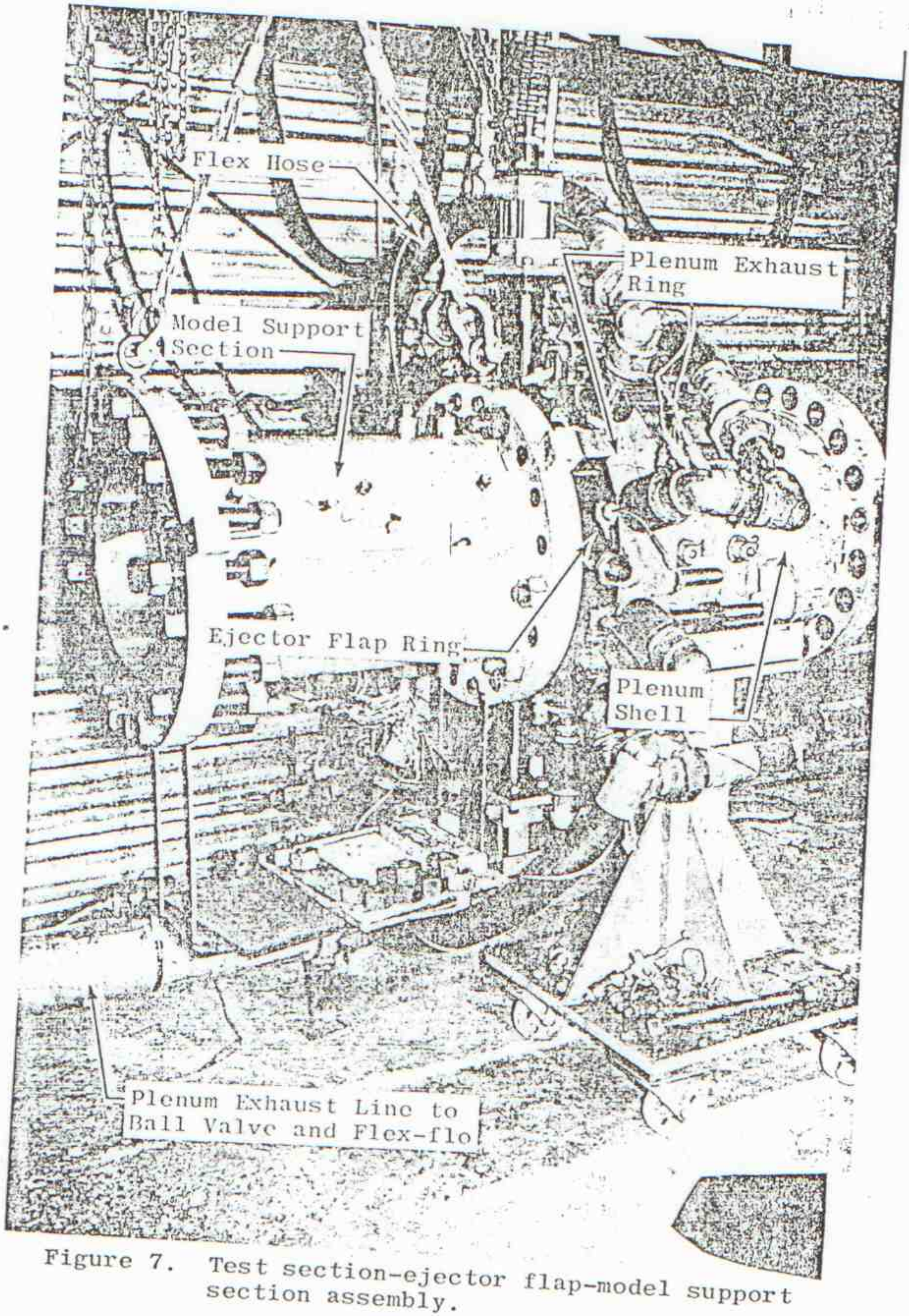

Figure 7. Test section-ejector flap-model support section assembly.

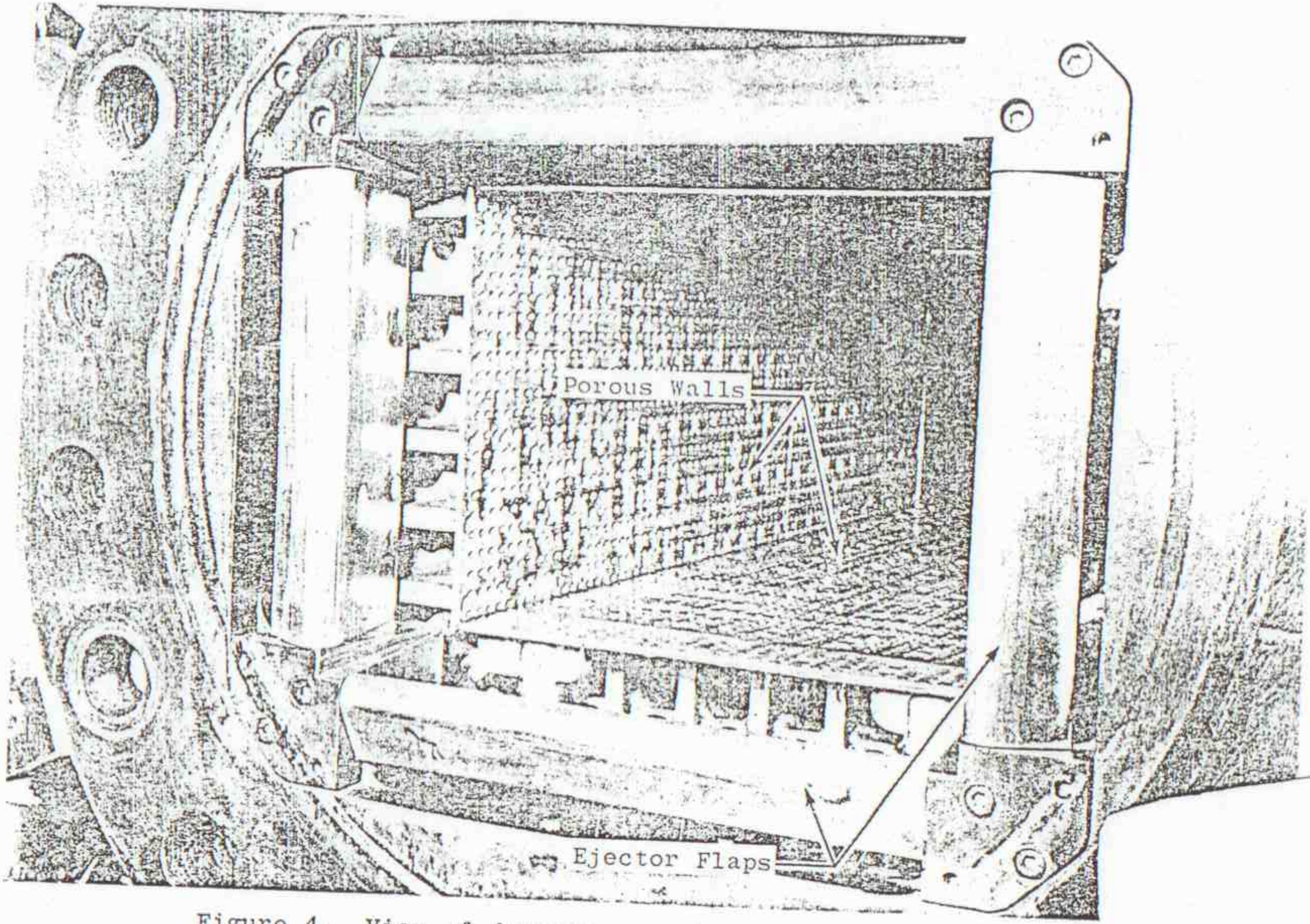

Figure 4. View of downstream end of test section, showing ejector flaps in open position.

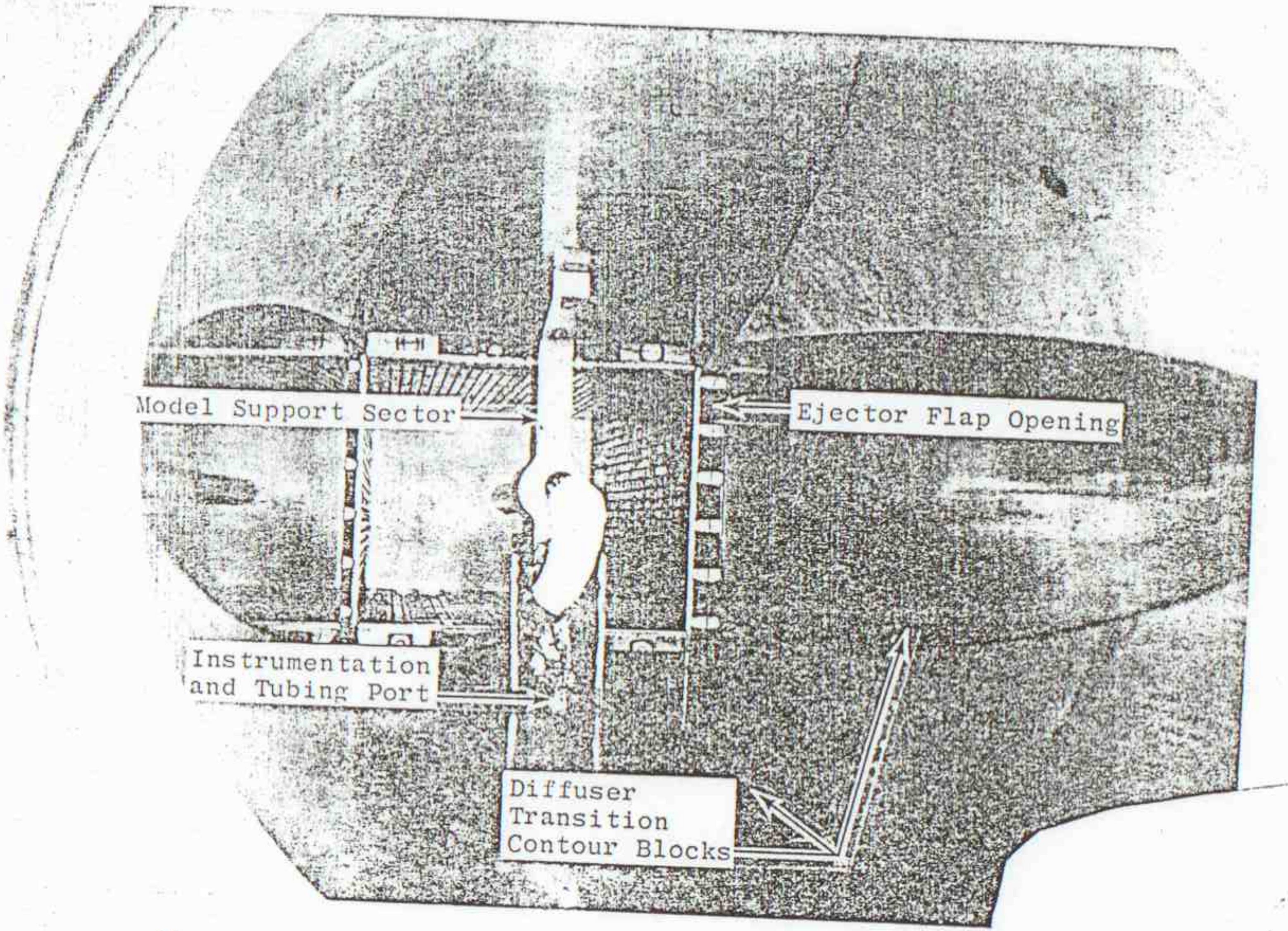

Figure 5. View looking upstream through diffuser.

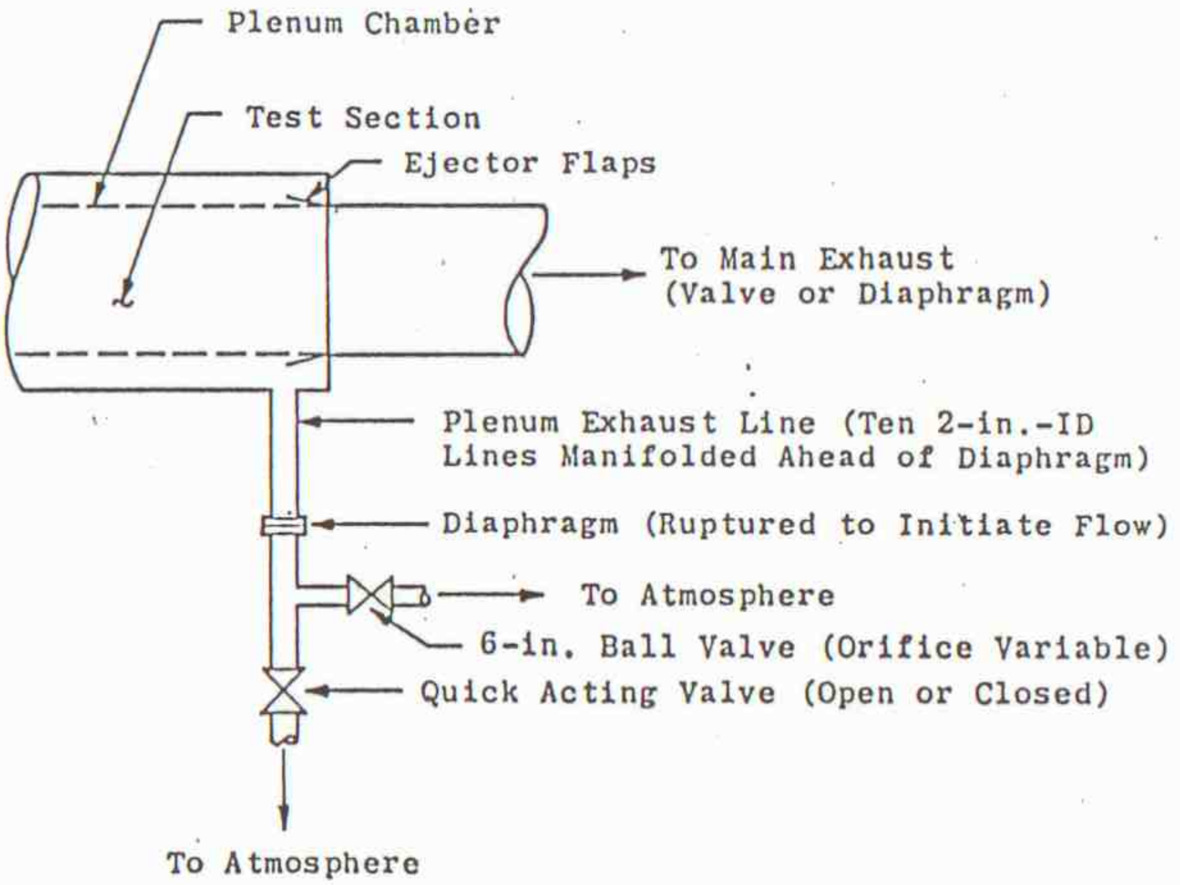

FIGURE 5 PLENUM EXHAUST SYSTEM

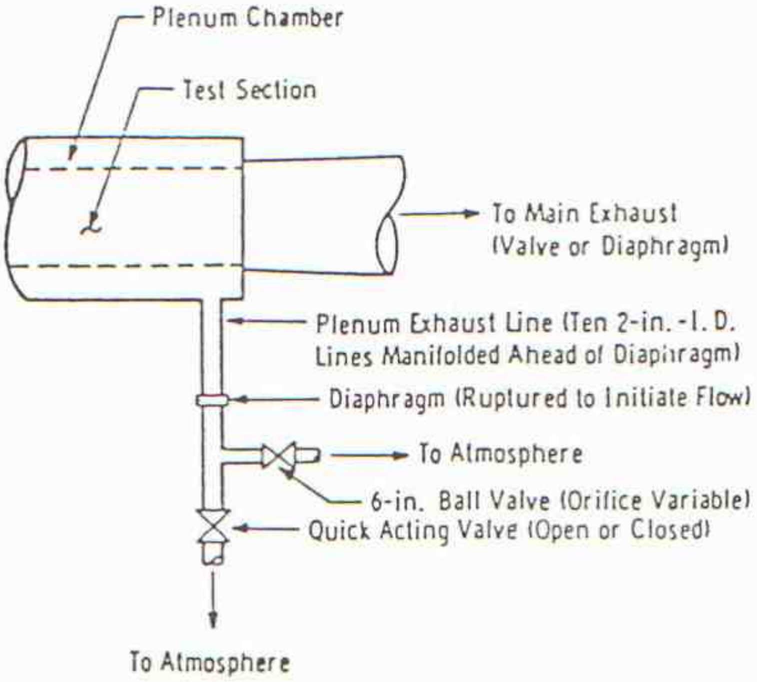

Fig. 1.1.3 Schematic of the Plenum Exhaust System

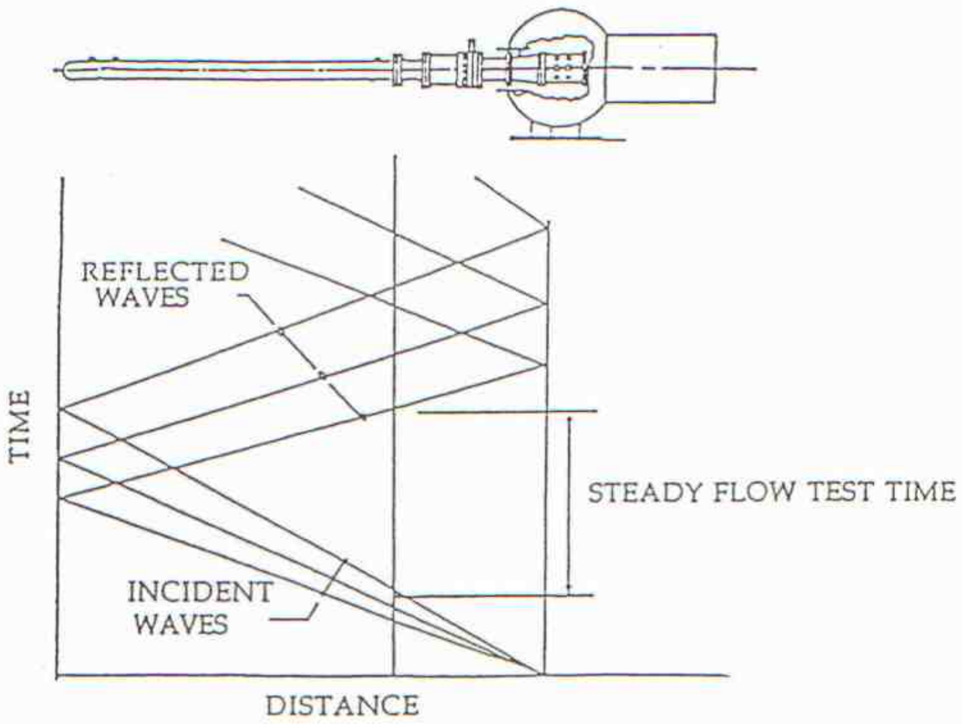

Fig. 1.2.1 The Ideal Wave Diagram for the Wind Tunnel

CONDITIONS

WALL POROSITY OF 4½ %
14 OPEN PORTS ON 16 INCH SSV
MODEL BLOCKAGE OF 0 %

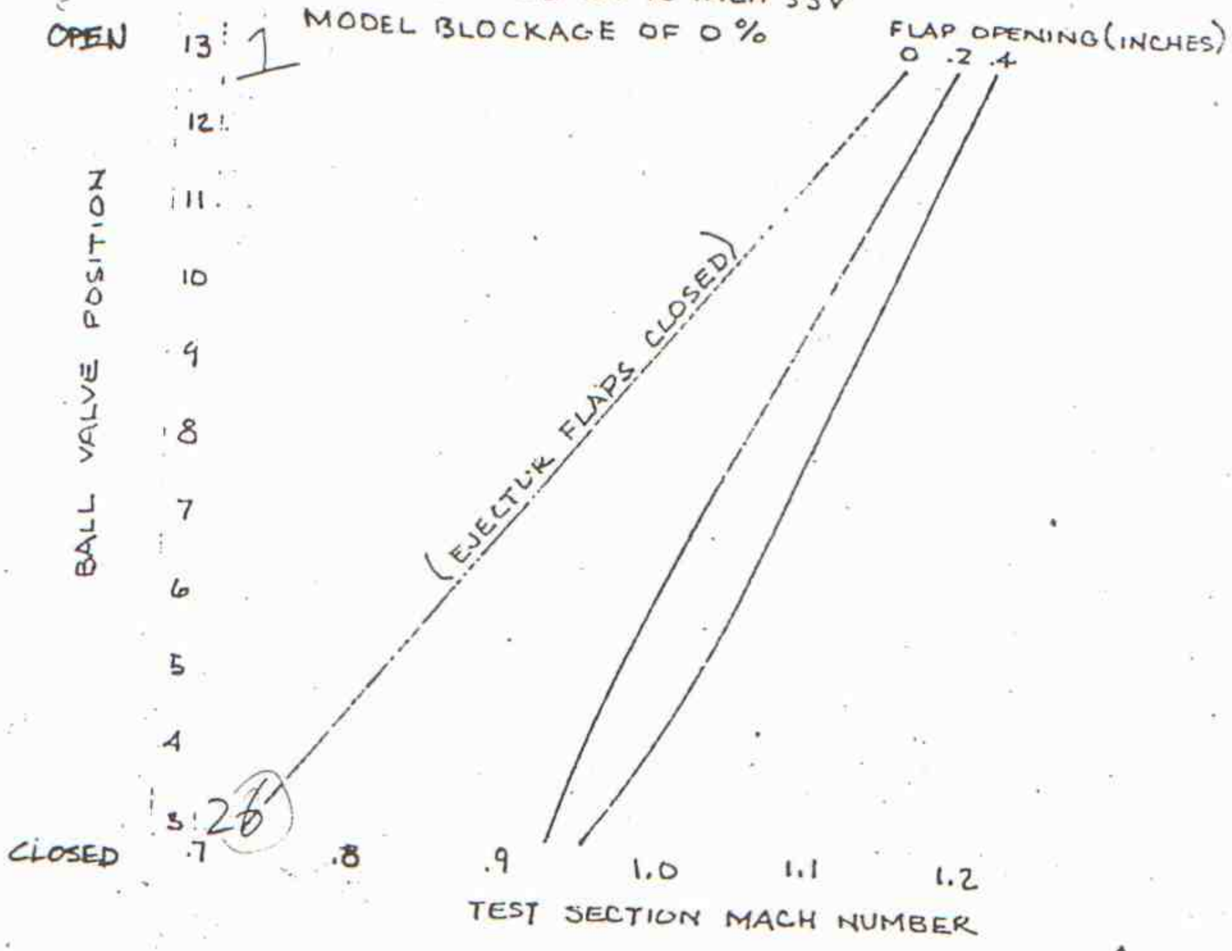

FIG 9B BALL VALVE POSITION VERSUS TEST SECTION MACH NUMBER FOR DIFFERENT FLAP OPENINGS

26 POSITIONS

POSITION 1 - FULLY ~~CLOSED~~ open
POSITION 26 - FULLY ~~OPEN~~ closed

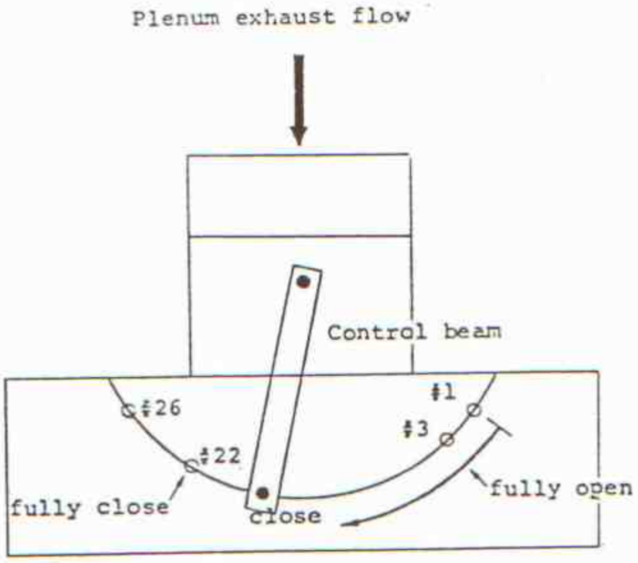

TOP VIEW

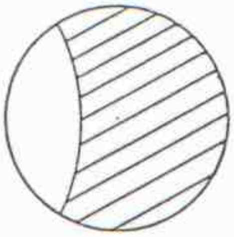

FRONT VIEW

FIGURE 6 BALL VALVE

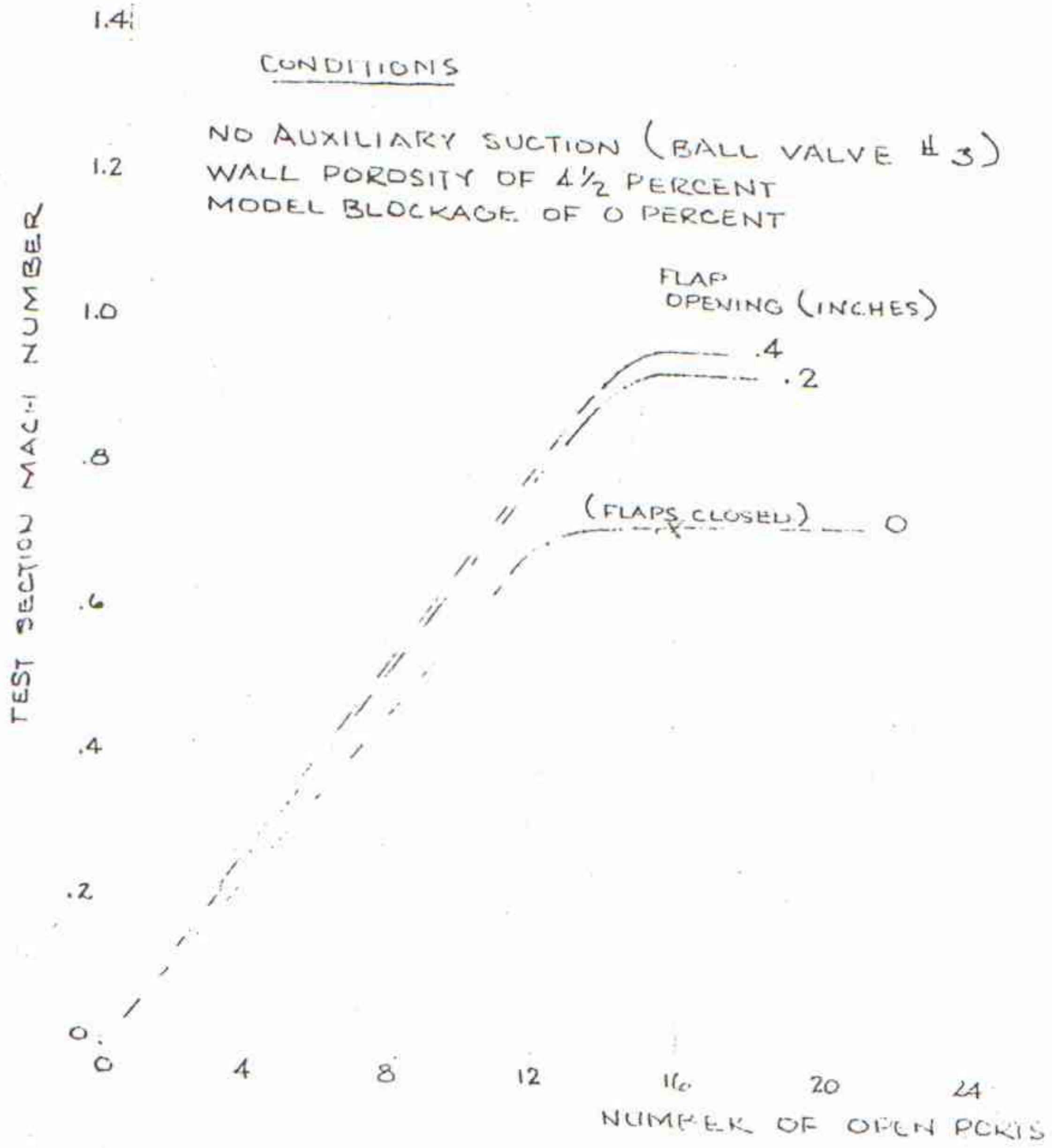

FIG 10 NUMBER OF OPEN PORTS ON THE 16 INCH SSV VERSUS TEST SECTION MACH NUMBER FOR DIFFERENT FLAP OPENINGS

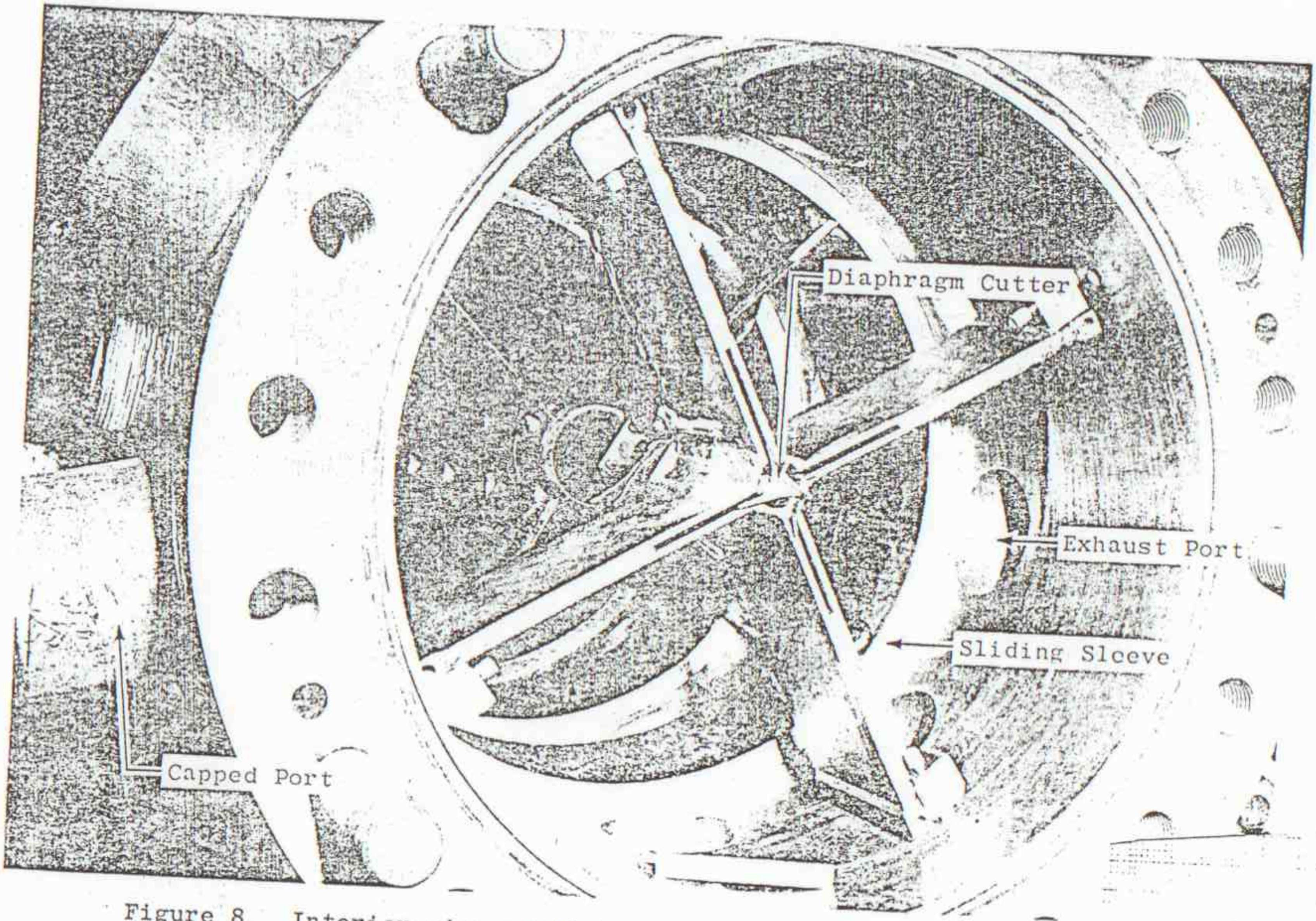

Figure 8. Interior view of 16-in. valve with cruciform installed.

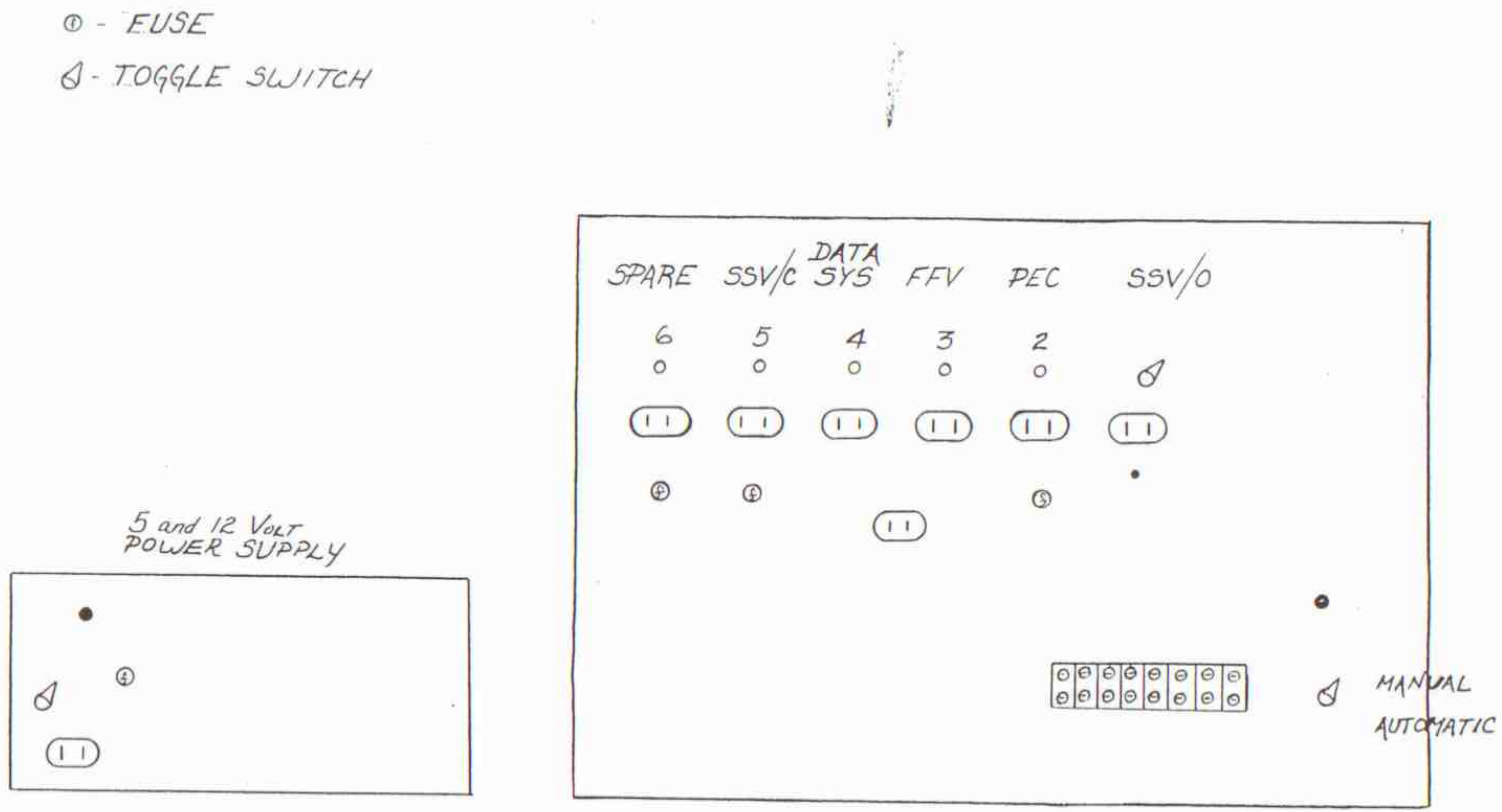

MANUAL CONTROL BOARD

Figure 11

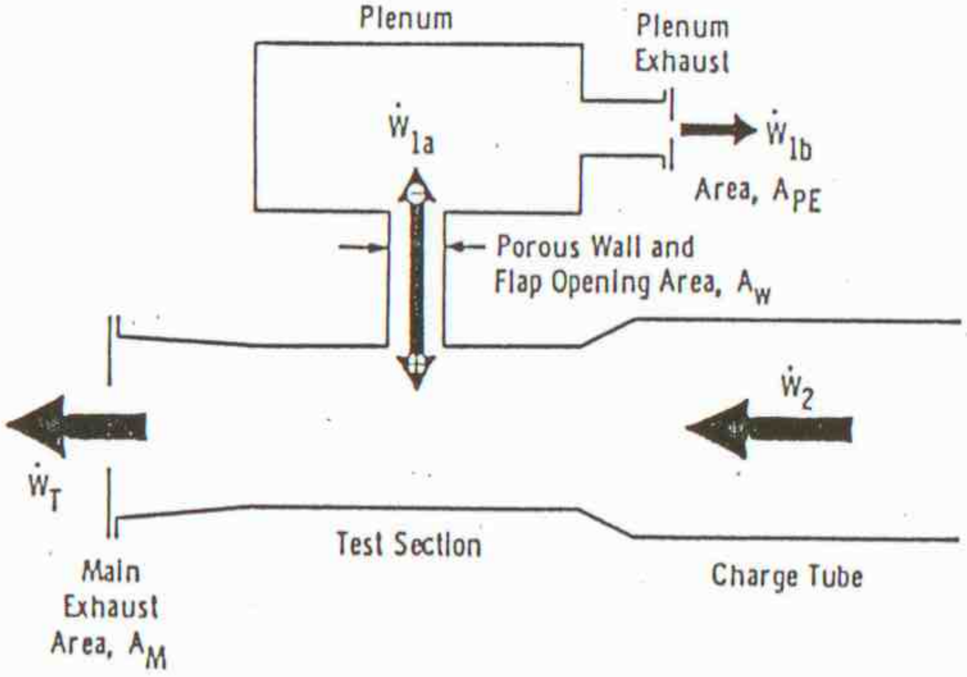

FIGURE 9 FLOW PROCESS DURING TUNNEL START

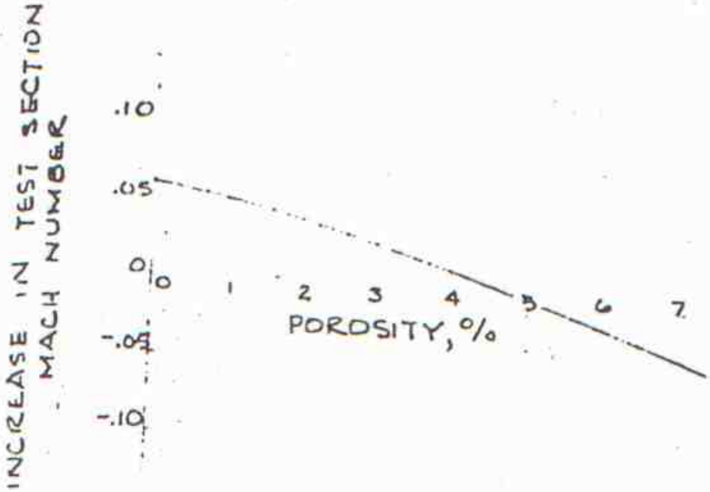

FIG 13 INFLUENCE OF WALL POROSITY ON TEST SECTION MACH NUMBER FOR A BASE POROSITY OF 4 1/2 PERCENT

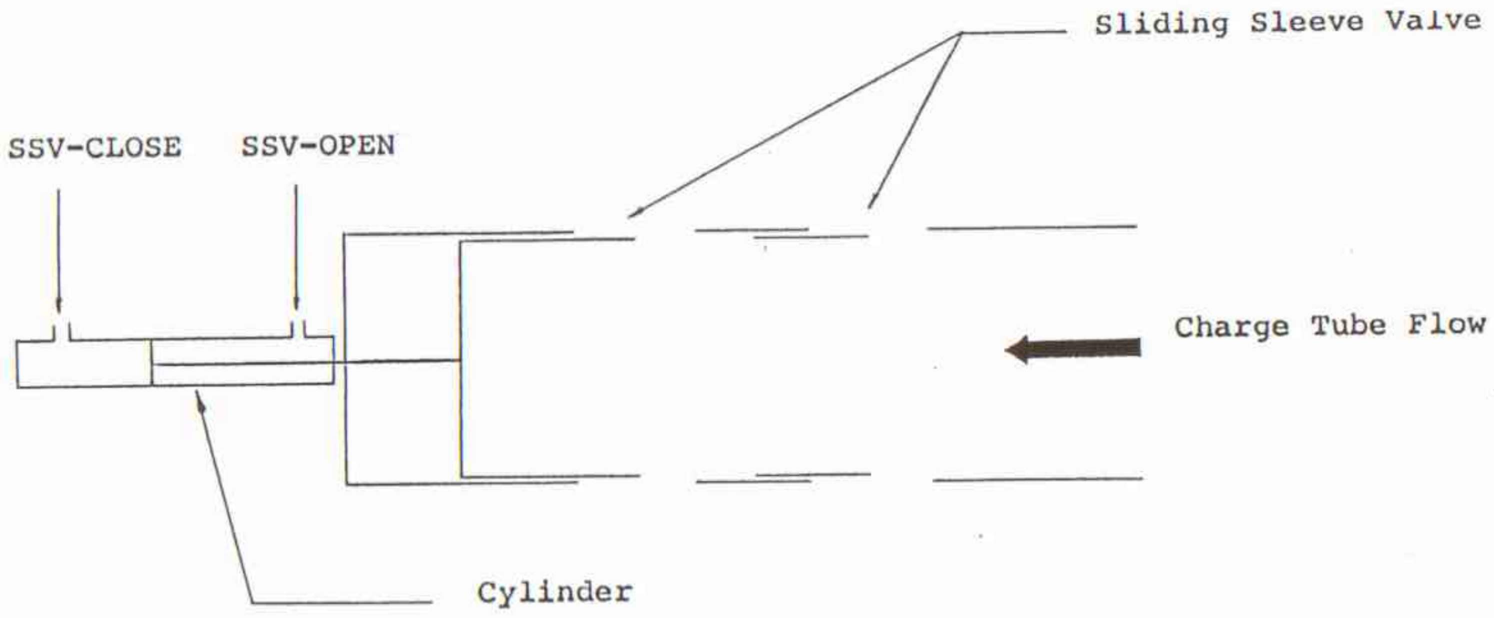

FIGURE 8 SLIDING SLEEVE VALVE

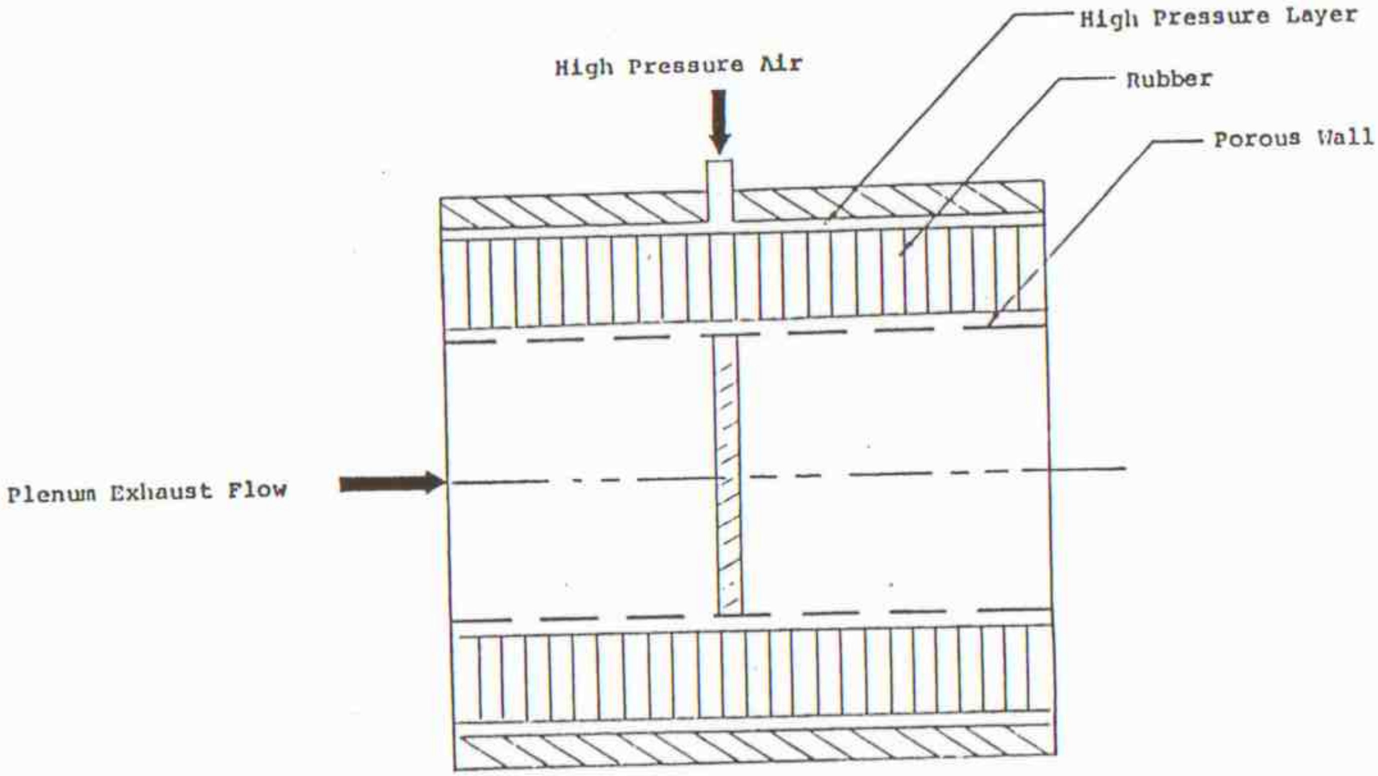

FIGURE 7 FLEX-FLO VALVE

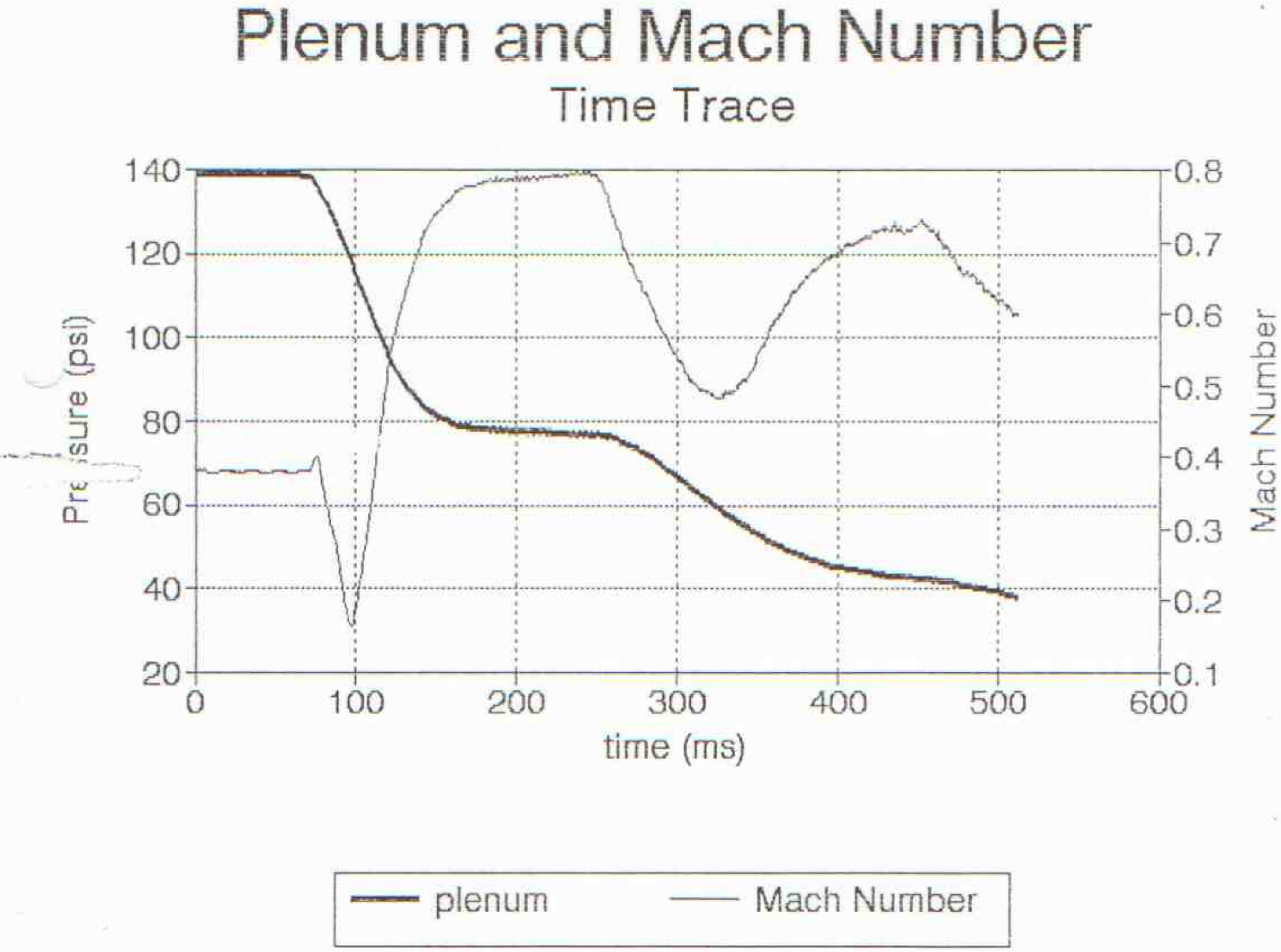
Plenum and Mach Number
Time Trace
140
120
100
80
60
40
20
Pressure (psi)
0.8
0.7
0.6
0.5
0.4
0.3
0.2
0.1
Mach Number
0
100
200
300
400
500
600
time (ms)
plenum
Mach Number

Figure 14

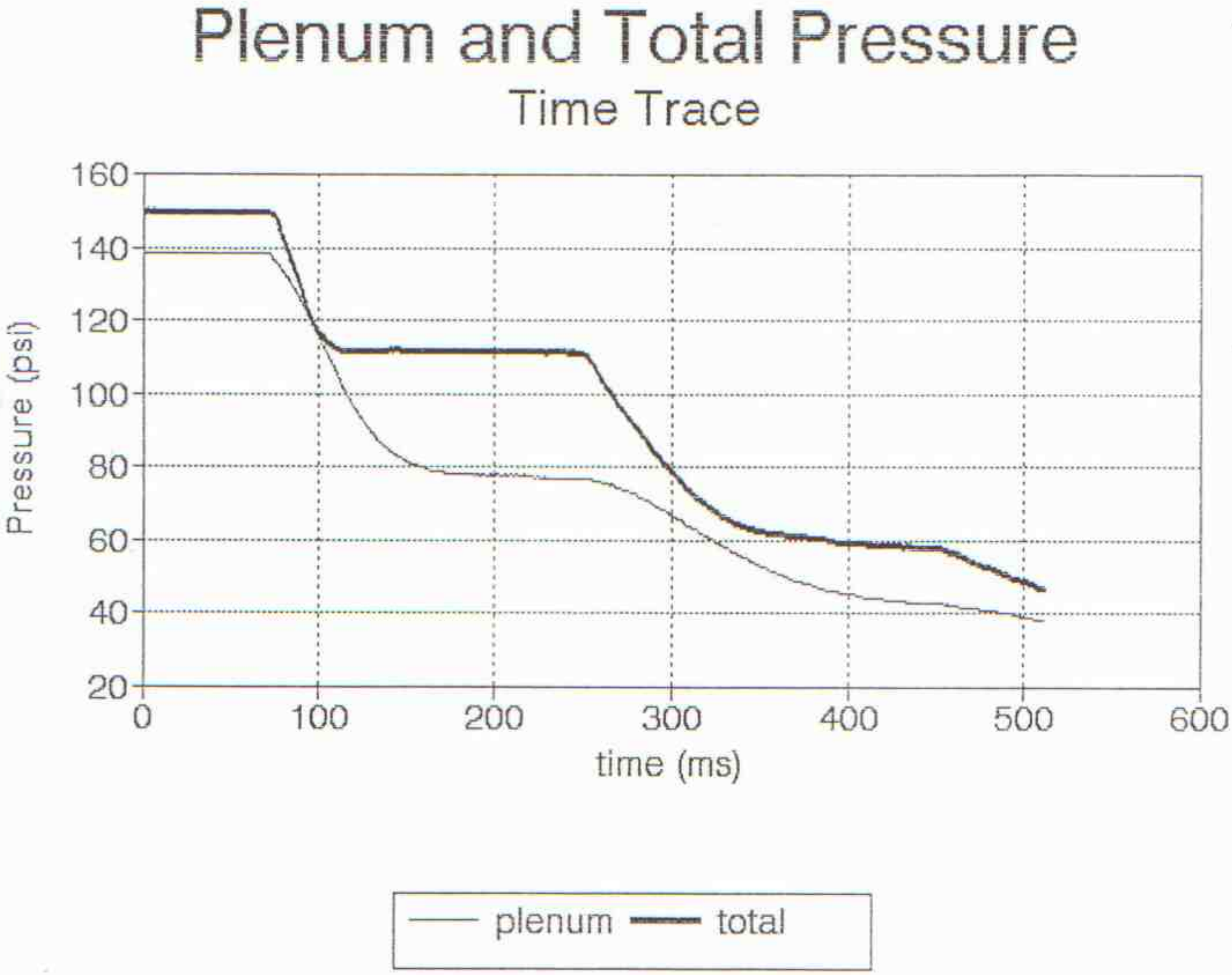
Plenum and Total Pressure
Time Trace
160
140
120
100
80
60
40
20
Pressure (psi)
0
100
200
300
400
500
600
time (ms)
plenum
total

Figure 15

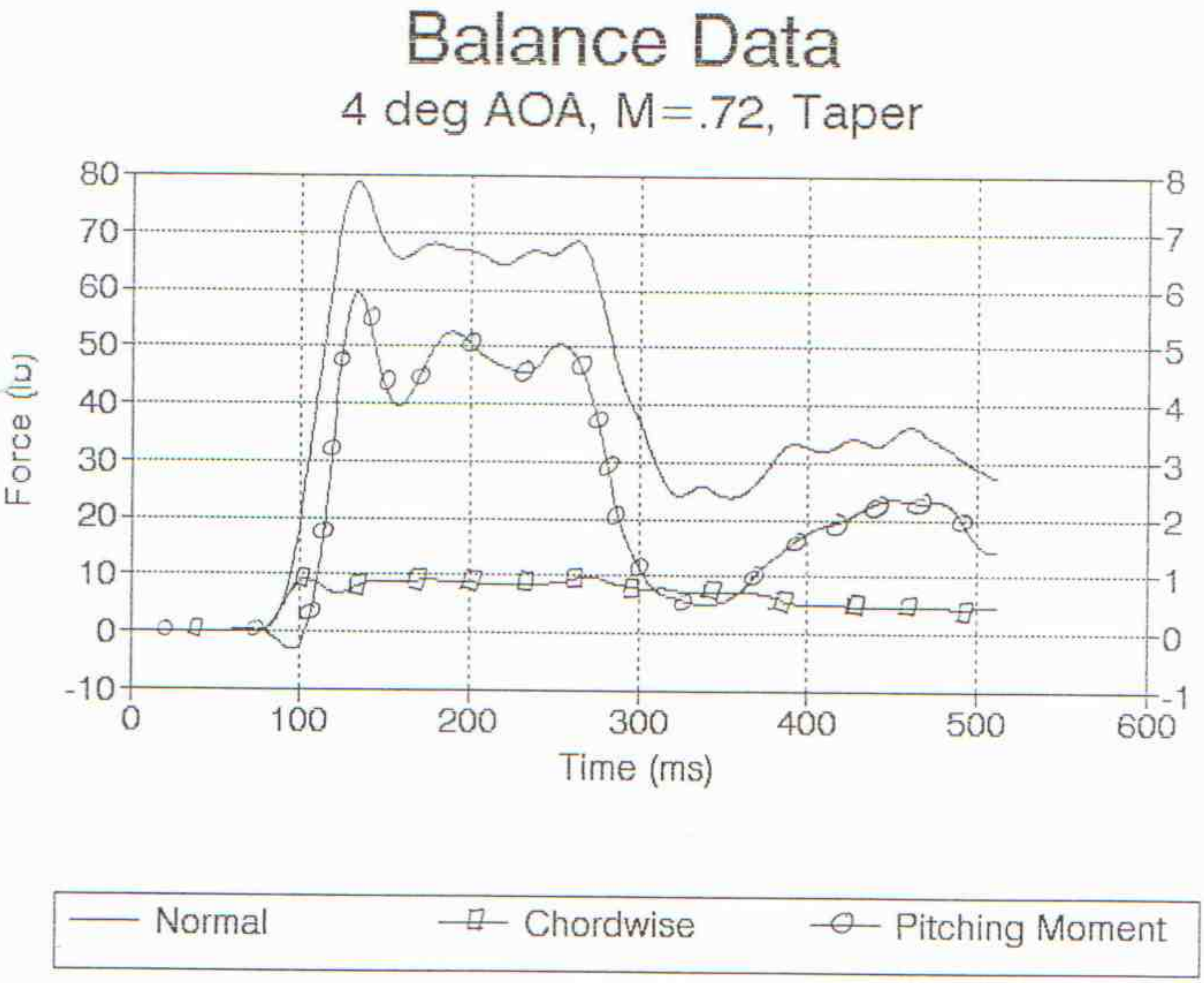
Balance Data
4 deg AOA, M=.72, Taper
Force (lb)
Moment (lb-in)
Time (ms)
80
70
60
50
40
30
20
10
0
-10
8
7
6
5
4
3
2
1
0
-1
0
100
200
300
400
500
600
Normal
Chordwise
Pitching Moment

Figure 16

TABLE 2

NOMINAL PRE-RUN TUNNEL SETTINGS

arge ssure sia)	Main Valve Drive Pressure, (psig) 12"	16"	Main Delay (msec)	Plenum Diaphragm (laying-mil)	Plenum Cutter Pressure (psig)	Plenum Delay (msec)	Flexflo Pressure (psig)	Flexflo Delay (msec)	Compu Del (mse
100	400	700	35	2-5	185	45	600	60	0
200	600	900	35	2-14	185	35	600	60	0
400	800	1 100	35	4-14	185	50	800	60	0

Figure 17

Table 2
New
manual

HIRT Transducer Calibration

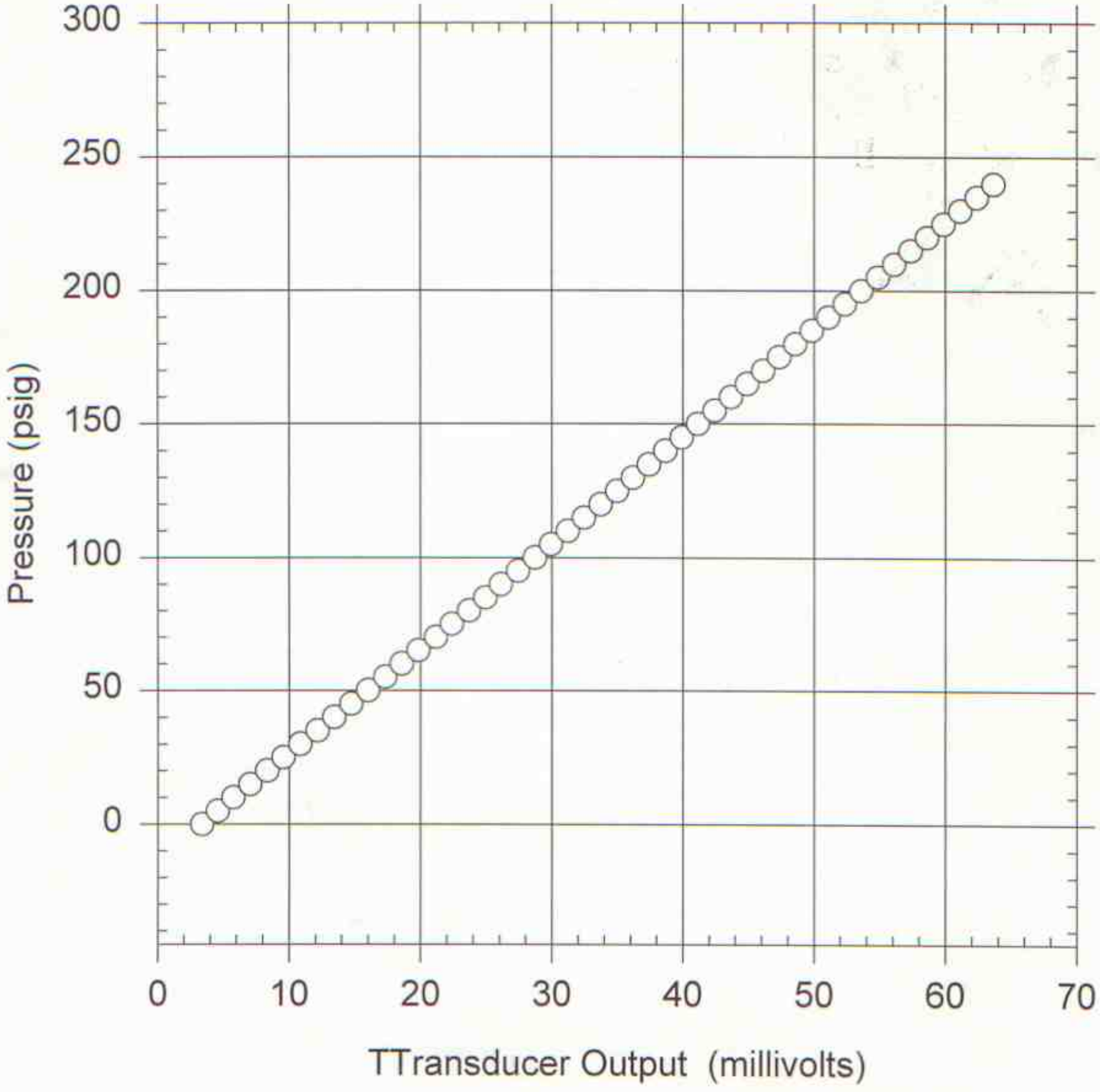

05 February 1996

HIRT DVM Transducer Calibration

Gage (psig)	DVM (mV)
0	3.39
5	4.59
10	5.77
15	7.06
20	8.35
25	9.57
30	10.86
35	12.17
40	13.44
45	14.74
50	16.01
55	17.33
60	18.57
65	19.84
70	21.18
75	22.40
80	23.69
85	24.94
90	26.12
95	27.43
100	28.72
105	29.96
110	31.23
115	32.48
120	33.72
125	34.99
130	36.20
135	37.41
140	38.67

12 March 1996

145	39.92
150	41.17
155	42.43
160	43.68
165	44.91
170	46.13
175	47.35
180	48.58
185	49.84
190	51.10
195	52.36
200	53.63
205	54.88
210	56.12
215	57.36
220	58.61
225	59.87
230	61.13
235	62.39
240	63.65

Five Hole Probe Calibration

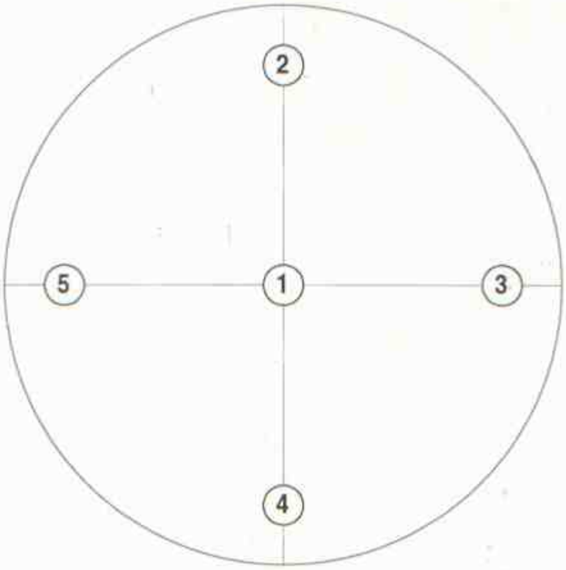

Port #2 can be located by finding the hairline running the length of the probe. Ports 3-5 are arrayed clockwise around the probe as you look straight at the cone. Port #1 is in the center. Note: the tubes are twisted inside the probe, so they don't line up with their corresponding port. Verify the tubes before connecting them!